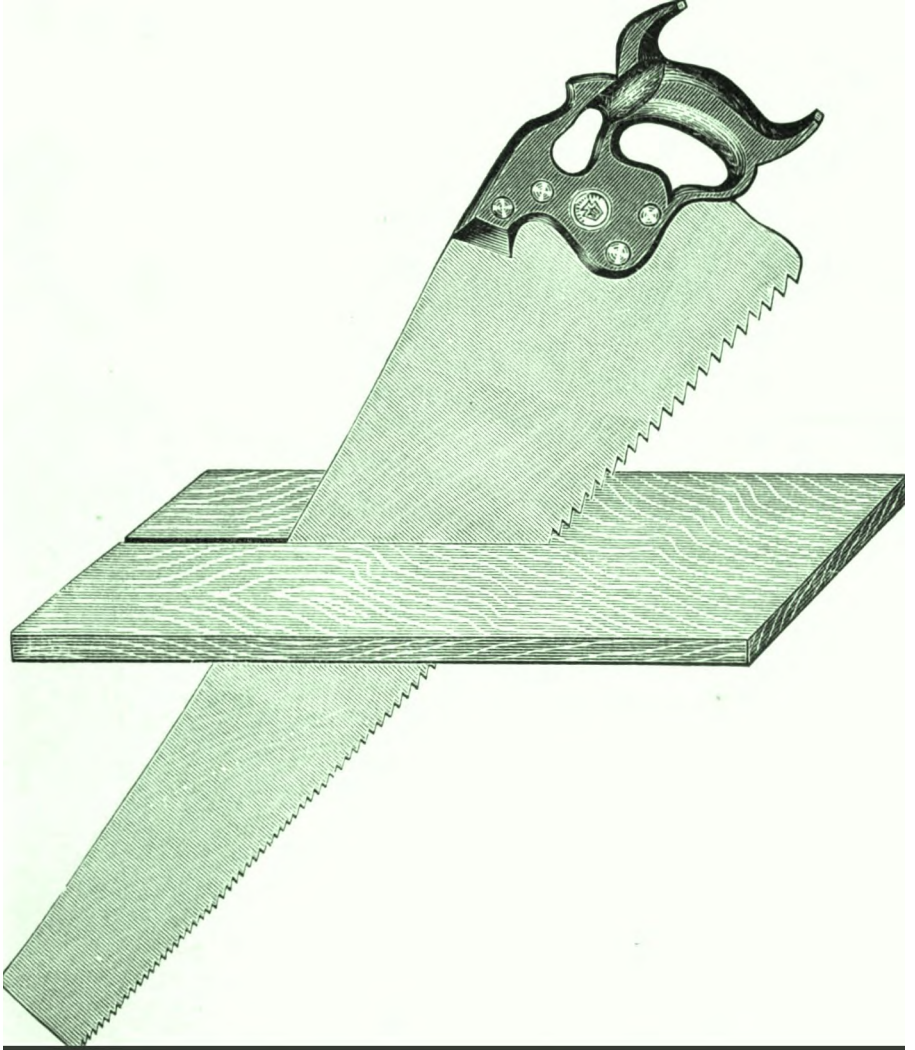

Educational woodworking for home and school

Joseph Charles Park

Digitized by Google

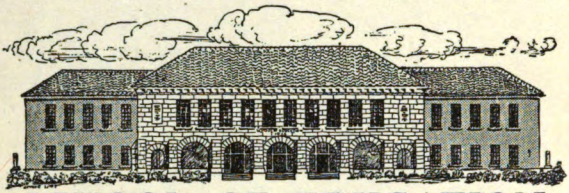

SCHOOL OF EDUCATION
LIBRARY

TEXTBOOK
COLLECTION

STANFORD UNIVERSITY
LIBRARIES

Digitized by Google

DEPARTMENT OF
EDUCATION
RECEIVED
NOV 15 1909
LELAND STANFORD
JUNIOR UNIVERSITY.

Digitized by Google

Digitized by Google

EDUCATIONAL WOODWORKING

FOR HOME AND SCHOOL

Digitized by Google

THE MACMILLAN COMPANY
NEW YORK · BOSTON · CHICAGO
ATLANTA · SAN FRANCISCO

MACMILLAN & CO., LIMITED
LONDON · BOMBAY · CALCUTTA
MELBOURNE

THE MACMILLAN CO. OF CANADA, LTD.
TORONTO

Digitized by Google

EDUCATIONAL WOODWORKING FOR HOME AND SCHOOL

BY

JOSEPH C. PARK

STATE NORMAL AND TRAINING SCHOOL
OSWEGO, NEW YORK

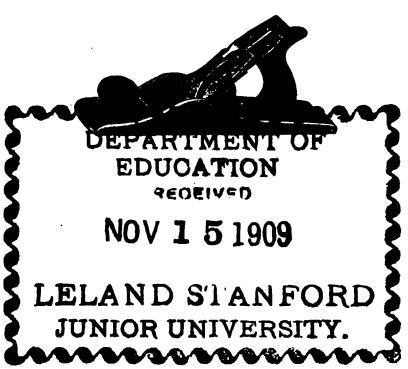

New York
THE MACMILLAN COMPANY
1908

All rights reserved

Digitized by Google

613309
C

COPYRIGHT, 1908,
BY THE MACMILLAN COMPANY.

Set up and electrotyped. Published March, 1908. Reprinted June, 1908.

Norwood Press
J. S. Cushing Co. — Berwick & Smith Co.
Norwood, Mass., U.S.A.

Digitized by Google

We are always in these days endeavoring to separate intellect and manual labor; we want one man to be always thinking, and another to be always working, and we call one a gentleman, and the other an operative; whereas the workman ought often to be thinking, and the thinker often to be working, and both should be gentlemen in the best sense. As it is, we make both ungentle, the one envying, the other despising, his brother; and the mass of society is made up of morbid thinkers and miserable workers.

—John Ruskin.

Digitized by Google

Digitized by Google

PREFACE

THE increased popularity of manual training as a part of the curriculum of the public schools and the demand for a text-book that can be put into the hands of pupils so that they may be held responsible for important subject-matter in connection with wood-work are the two main reasons which have led to the publication of this volume. The book, for convenience, is divided into parts, but it is not intended that Part I shall be completed before Part II is taken up. On the other hand, work should be given from the different parts from the beginning, and pupils should be held responsible for the work given just as they are held responsible for work in arithmetic or geography.

The book is intended to be used under the direction of a skilled instructor who has sufficient technical knowledge and teaching ability to lead his pupils to become capable in this line of work. Many illustrations of positions while at work are therefore omitted, because the instructor should show correct positions in the use of tools and should insist that the pupils acquire correct habits in their use.

The "Schedule of Work" (page 14) gives in a general way the plan of the work. In some schools it may be necessary to make a few changes in this schedule, owing to local conditions, but as far as possible it should be followed. The work under "Topics for Study,"

Digitized by Google

"Technical Operations," and "Tools" should be given in the form of regular recitation work, having both oral and written work. Pupils should have sufficient work with the "Key" so that they may be able to know the names and characteristics of common woods. The work in all of its phases should be vigorous and full of well-directed activity.

The writer wishes to acknowledge his gratitude for helps given in the preparation of this volume, aside from the various sources which are given in the footnotes, to the following: —

Herbert H. Smith, Editor Forest Service Publications, for permission to use the key given in Appendix A; President Cree T. Work, College of Industrial Arts, Denton, Texas, for the cuts given in Appendix B, also for the cuts shown under Figs. 148 and 263, all of which were taken from his San Francisco "Outlines of Manual Training"; Professor C. R. Richards, Dean of Engineering, the University of Nebraska, Lincoln, Nebraska, for the cuts shown in Figs. 208, 210, 211, 213, 214, 215, 224, and 225, which were taken from his "A Manual of Wood Turning."

The writer is also deeply indebted to the following people, who so kindly sent to him for publication in this volume drawings of successful projects which have been used in some of the leading manual training centers in the United States: —

Mr. L. A. Bacon, Director of Manual Training, Indianapolis, Indiana; Mr. L. R. Abbott, Director of Manual Training, and Mr. Emil Wydman, Grand Rapids, Michigan; Mr. C. E. Karlson, Director of Manual Training, Altoona, Pennsylvania; Mr. Louis C. Butler and

Digitized by Google

Mr. R. F. J. Raebel, St. Louis, Missouri; Mr. B. H. Van Oot, Director of Manual Training, Normal University, Las Vegas, New Mexico; Mr. T. W. Breckheimer, North High School, Minneapolis, Minnesota; and Mr. Bradley S. Joice and Mr. Donald S. McGuire, Maryland School for the Blind, Baltimore, Maryland.

The manuscript has been read by Dr. William C. Bagley and Professor Amos W. Farnham of the State Normal and Training School, Oswego, New York, both of whom have offered valuable criticisms, for which the writer wishes to express his gratitude.

The writer is also indebted to the following manufacturers for cuts used in this publication and for information regarding tools and machines: —

Sargent & Company, 149 Leonard Street, New York.
Hammacher, Schlemmer & Company, New York.
Stanley Rule and Level Company, New Britain, Connecticut.
Henry Disston & Sons, Philadelphia, Pennsylvania.
Cincinnati Tool Company, Cincinnati, Ohio.
Bickford & Francis Belting Company, Buffalo, New York.
American Woodworking Machinery Company, Rochester, New York.
J. T. Towsley Manufacturing Company, Cincinnati, Ohio.
Brown & Sharpe Manufacturing Company, Providence, Rhode Island.
Millers Falls Company, 28 Warren Street, New York.
Grand Rapids Hand Screw Company, Grand Rapids, Michigan.
Pike Manufacturing Company, Pike, New Hampshire.
The Carborundum Company, Niagara Falls, New York.
The Cleveland Stone Company, Cleveland, Ohio.
Ridgway Dynamo and Engine Company, Ridgway, Pennsylvania.
The David Maydole Hammer Company, Norwich, New York.
Buck Brothers, Millbury, Massachusetts.
Syracuse Twist Drill Company, Syracuse, New York.

Digitized by Google

Columbus Forge and Iron Company, Columbus, Ohio.
Utica Drop Forge Company, Utica, New York.
Coes Wrench Company, Worcester, Massachusetts.
C. Parker Company, Meriden, Connecticut.
E. C. Stearns & Company, Syracuse, New York.
Nicholson File Company, Providence, Rhode Island.
Fox Machine Company, Grand Rapids, Michigan.
Snell Manufacturing Company, Fiskdale, Massachusetts.
F. E. Reed Company, Worcester, Massachusetts.
The Russell Jennings Manufacturing Company, Deep River, Connecticut.

The tables given under Wood (Part III) are taken from Bulletin No. 10, United States Division of Forestry.

Some of the matter given in the Introduction, and on nails and nailing, screws and glue, is taken from articles which were written by the author for *American Education*, and are published here by agreement.

The writer also wishes to acknowledge his gratitude to Dr. Isaac B. Poucher, Principal of the State Normal and Training School, Oswego, New York, for the many suggestions and encouragements which he has given in the working out of experiments in manual training work, which have contributed largely to the success of this volume.

JOSEPH C. PARK.

State Normal and Training School,
Oswego, New York, June, 1907.

Digitized by Google

CONTENTS

PAGE

INTRODUCTION 1

Manual training: what it is and its place in education; suggestions to students; schedule of work; tool list; technical terms.

PART I

WOODWORKING TOOLS 21

1. Benches. 2. English measure. 3. The metric system. 4. Rule. 5. Try-square. 6. Bevel. 7. Framing square. 8. Rafter table directions. 9. Brace measure. 10. Octagon scale. 11. Essex board measure. 12. History of framing square. 13. Plumb and level. 14. Marking gauge. 15. Mortise gauge. 16. Gauge attachment. 17. Dividers or compasses. 18. Calipers. 19. Wire gauge. 20. Sloyd knife. 21. Socket firmer-chisel. 22. Tang firmer-chisel. 23. Corner chisel. 24. Gouge. 25. Wood-turning tools. 26. Wood-carving tools. 27. Planes. 28. Spokeshave. 29. Metal snips. 30. Saws and their construction. 31. Rip saw. 32. How to sharpen a rip saw. 33. Cross-cut saw. 34. How to sharpen a cross-cut saw. 35. Back saw. 36. Bracket saw. 37. Hack saw. 38. Miter box. 39. Files. 40. Wood rasps. 41. File cleaner. 42. Auger. 43. Auger bits. 44. Short auger or dowel bits. 45. Wood drills. 46. Gimlet bits. 47. Auger bit gauge. 48. Countersink. 49. Brace or bit brace. 50. Screw-driver. 51. Screw-driver bit. 52. Screw and plug bit. 53. Plug cutter. 54. Hand screw. 55. Screw clamp. 56. Adjustable steel bar clamp. 57. Stationary iron vise. 58. Wrench. 59. Flat nose plier. 60. Round nose

Digitized by Google

PAGE

plier. 61. Saw vise. 62. Picture frame vise. 63. Hammer. 64. Mallet. 65. Anvil. 66. Nail set. 67. Belt punch. 68. Carver's punch. 69. Grindstone. 70. Oil stone. 71. Carborundum stones. 72. How to sharpen edge tools. 73. Cabinet scraper. 74. Oiler. 75. Bench brush. 76. Handles. 77. Steel letters and figures. 78. Trimmer.

PART II

WOODWORKING MACHINES 99

79. Work. 80. Energy. 81. Power. 82. Band saw. 83. Scroll saw. 84. Swing saw. 85. Combination saw bench. 86. Saw guard. 87. Circular saws. 88. The speed of circular saws. 89. Rules for calculating the speed of saws, pulleys, and drums. 90. Single surfacer. 91. Jointer. 92. Wood-turning lathe. 93. Belts. 94. Formulæ used in selecting belts. 95. Belt lacings. 96. Old style lace. 97. New style lace. 98. Single hinge lace. 99. Double hinge lace. 100. Belt hooks.

PART III

WOOD (OUTLINE STUDY) 119

I. Classification of trees as to kinds of leaves and structure of wood. II. Composition of wood. III. Decay of trees. IV. Lumbering. V. Properties of wood, tables and laws.

PART IV

FASTENING DEVICES USED IN WOOD CONSTRUCTION. . 129

Nails and nailing. The screw as a fastening device in wood construction. Glue. Glue heaters. Wood fastenings (dowels, pins, cleats, keys, and wedges).

Digitized by Google

PART V

PAGE

WOOD FINISHING 149

Aims. Pale tints in oil. Deep tints in oil. Stains. Varnishes. Shellacs. Fillers. Specifications for finishes.

PART VI

EXERCISES 163

Knife work for schools without shops. Drawings. Instructions. Bench work, involving joinery and cabinet making. Drawings and instructions.

PART VII

WOOD TURNING 215

History. Tools. Uses and care of tools. Instructions and drawings.

APPENDIX A: Key to the More Important Woods of North America 233

APPENDIX B: Problems in Construction and Geometric Helps 283

APPENDIX C: Useful Tables 293

Digitized by Google

Digitized by Google

EDUCATIONAL WOODWORKING FOR HOME AND SCHOOL

INTRODUCTION

MANUAL TRAINING: WHAT IT IS AND ITS PLACE IN EDUCATION

MANUAL TRAINING is a term used extensively by educators in defining a part of a system of general education. One would infer from the term "manual," meaning hand, that this branch of education is the training of the hand, but it is more than this. Not all that is done with the hand is manual training in the school sense of the term. In laboratory work in physics and chemistry the hand is trained to use apparatus in a skillful way, but this is not considered as manual training. Manual training is a general term which signifies the expressing of ideas in things by means of tools in working with such materials as paper, cardboard, clay, wood, iron, brass, copper, tin, etc. Manual training does not include work with apparatus, neither is its purpose to teach a trade.

Man is by nature a "tool-using animal" and has been so from remote periods of antiquity. Let us stop to consider briefly how much of the history of mankind is written in the tools that have come down to us. We look at the pens made of reeds which were used by the

Digitized by Google

ancient Egyptians and a series of facts are revealed by means of those tools which were used by man more than four thousand years ago. Axes made of stone, copper, bronze, etc., are dug out of the earth, and each tells a different story of the life of savage peoples of antiquity. The story of man's development is written in his tools just as plainly as the history of our earth is written in the rocks.

It is almost impossible to conceive of man without tools, yet in the beginning of human existence he had no tools. He was naked and without food and fire, living in caves and hollow trees, searching for fallen nuts under the trees and for fish and game in the streams and mountains. He was ever hiding from stronger animals and always seeking an opportunity to attack weaker ones.

Some one has wisely said that human culture began with fire, but no one has said when fire was first used by man. Doubtless some rude tools were invented before fire was discovered, and these tools probably led to the discovery of fire. With fire came protection and comfort. It drove away the fierce animals, which were afraid of fire; it protected man from cold. The weaker members of the family were left by the fireside while the stronger ones went out in search of food.

But man needed more than fire for his protection, for he was one of the weakest of animals. In expressing the weakness of man in this early period, Katharine Elizabeth Dopp[1] says: "He could not run as fast as the horse, swim as well as the fish, fly as the eagle, crawl as the serpent, or

[1] "The Place of Industries in Elementary Education," p. 19. The University of Chicago Press.

Digitized by Google

render himself inconspicuous by changing his color to correspond with the natural objects with which he habitually came in contact, or by maintaining such a control of his muscles as the wild calf and other animals do when they remain motionless in order to be unobserved. He was not protected with armor as the turtle is, with a thick skin as the rhinoceros, with a heavy coat as the mammoth, or with feathers and fur as the birds and beasts of prey. In his conflicts he could not strike as the cave bear, kick as the horse, crush as the rhinoceros, gore as the urus, or pierce and rend as the tiger. In the exercise of his senses and in muscular force he was surpassed by many of them." What man needed most in his weak condition was tools, and being endowed with intelligence he was able to construct them, although very crude ones, out of the materials at his command. At first his hands and teeth were substitutes for tools. His first constructed tool was the hammer. This he may have used in opening the shells of oysters, nuts, etc. In combat he fought at close range and therefore his blows were weak. Later he found that by using a club as a hammer he could strike a harder blow and thus slay even much stronger animals than himself. Still later it became necessary for man to fight at long range, and out of this necessity grew the need of, and therefore the invention of, the bow and arrow — tools of great utility among primitive people.

The development of the bow and arrow was a great step in man's advancement, for at long range he could kill large animals, which furnished materials for food and clothing. In making and operating the bow and arrow

Digitized by Google

man developed physically and mentally. Many problems came up in the construction and use of these tools, the solution of which demanded the activity of reason. In making the bow there was the kind of wood to be considered, when it should be cut, the seasoning of the timber, the shape and length of the bow. In making the string for the bow and in making the arrows other problems arose, all of which were carefully worked out in the course of time.

Among some of the Indian tribes of to-day certain rules regarding the bow and arrow which were worked out centuries ago are still in use. Of course, a boy could not use a bow that was made for a man, and two men differing in physical strength could not well use the same bow; so a difference in the size and strength of the individual led to modifications of these tools so that they could meet the requirements of each individual. Each individual made his own bow and arrow, and in making them certain units of measurement were and are still employed. The Indian hunter in making his bow does not use a standard length; the bow must be exactly eight times the span from the thumb to the little finger of the hunter using it, and the length of the arrow must be exactly the distance from the armpit to the end of the thumb, measuring on the inside of the extended arm. Similar methods were employed in the making of all tools. In writing of the bow and arrow, Thomas Wilson[1] says: "The bow and arrow was the greatest of all human inventions — greatest in that it marked man's first step in mechanics, greatest in adaptation of means to the

[1] *Smithsonian Report*, 1894, p. 980.

Digitized by Google

end, and as an invented machine it manifested in the most practical and marked manner the intellectual and reasoning power of man, and his superiority over the brute creation. It, more than any other weapon, demonstrates the triumph of man over the brute, recognizing the limitations of human physical capacity in contests with his enemies and the capture of his game." His necessity demanded the bow and arrow, and this led to its construction and use. As man increased his variety of tools, he was gradually lifted to a higher plane of civilization.

Economists have classified the activities of the race into three main divisions, as follows: First, the house industries, or the period of domestic economy, which lasted from the earliest times until the beginning of towns in the tenth century. Second, the period of town economy, or the period of handicrafts, extending from the tenth century to the beginning of modern times. Third, the period of national economy, or the age of machinery and the factory, in which we now live. In passing through these activities many stages are represented. We note the hunting stage, the fishing stage, the pastoral stage, the agricultural stage, the age of metals, the stage of trade, travel, and transportation, the city state, the feudal system, the handicraft system, and the factory system.

It is believed that the child in the course of its development passes through practically all of the stages that the race has passed through, and manual training in the home and in the school helps to supply the needs of the child in passing through the different stages of his development. Manual training not only helps the child to appreciate the activities of life of to-day, but it also shows

Digitized by Google

the relation between the activities of the past and the present. Manual training deals with life, and is one of the serious considerations in the history of child development. In Carl Bucher's "Industrial Evolution"[1] he writes: "After all, the comforting result of every serious consideration of history is, that no single element of culture which has once entered into the life of men is lost, that even after the hour of its predominance has expired it continues in some more modest position to coöperate in the realization of the great end in which we all believe, the helping of mankind toward more and more perfect forms of existence."

The rough highway between the aboriginal and man has been paved by means of the seven hand tools — the hammer, the axe, the saw, the plane, the square, the chisel, and the file. The influence of tools upon civilization is expressed most graphically by Carlyle in these words: "Man is a tool-using animal. He can use tools, can devise tools; with these the granite mountains melt into light dust before him; he kneads iron as if it were soft paste; seas are his smooth highways, winds and fire his unwearying steeds.

"Nowhere do we find him without tools; without tools he is nothing, with tools he is all."

In early times, before the institutions of society became so complex and so far reaching in their demands and influences, the home was one of the most potent factors in education. In rural communities to-day and in the best regulated homes wherever they may be this institution is still a powerful influence in the cause of

[1] Page 184.

Digitized by Google

education. The homes of our ancestors were made by men and women of great practical efficiency and this efficiency was imparted to the rising generation largely through the influences of the home. In speaking of the influence and efficiency of men and women in early times, Henry Turner Bailey, in " The Arts and Crafts in the Public Schools," [1] says: —

" The Man. — Cleared land, cut wood, made rails and posts, built stone walls; built barns and sheds, made simple furniture and farm utensils, involving carpentry, blacksmithing, and painting; cared for bees, poultry, sheep, cattle, horses; could break colts and steers; milk, shear sheep, butcher; could plow, plant, cultivate and harvest vegetables; sow, mow, reap, thresh, and winnow grain; could read the sky, tell birds, wild animals, insects, and common plants and trees at sight; could plant, prune, and graft trees; make maple sirup and vinegar, cure ham and bacon; fish, trap, and hunt successfully; make shoes, harnesses, and simple tools; weave baskets; make kites, bow guns, darts, whistles, etc., for the children; repair anything; shave himself; make a telling speech at town meeting.

" The Woman. — Understood all phases of housework, sweeping, dusting, washing, ironing; could cook, make yeast, soap, candles, butter, cheese, sausages, preserves of all sorts, candy, wines, and cordials; could spin yarn from wool and thread from flax; dye and knit, weave and embroider; shrink cloth, bleach cloth;

[1] An address before The American Institute of Instruction at New Haven, Conn., July, 1906. Published in the January, 1907, *School Arts Book*, The Davis Press, Worcester, Mass.

Digitized by Google

cut out and make ordinary garments, darn, and mend anything well; braid rugs, paper a room, cut hair; gather medicinal herbs, nurse the sick, rear children; manage a flower garden, have potted plants bloom all winter indoors; milk, make hay, and have all the children clean and neatly dressed at church on time, Sunday morning."

The average home of to-day has not the discipline which gives the efficiency that the old home life used to give, and this naturally puts greater responsibility on the schools of to-day which are called upon to provide adequate training in hand work, training that formerly was given in the home. Industry has always been a dominant force in the upbuilding of all social structures. Nowhere is this seen more clearly than in child development. Professor O'Shea, in speaking of the child's first absorbing interest which is based upon industrial activity, says:[1] " In the earliest years the pupil's chief interest is in constructive activity. If he be given freedom to do as he chooses, and suitable equipment, by far the larger part of his time will be spent in construction, in imitation of the activities going on about him. If he has blocks, he will be building; if paper and scissors, he will be cutting; if sand, he will be modeling; if tools, he will be framing a box or a house or what not; all, of course, in a crude, imperfect way." These constructive activities, as Professor Dewey expresses it,[2] " evoke and direct what is most fundamental and vital in the child,

[1] In " Dynamic Factors in Education," New York, 1906, p. 59 (Macmillan.)

[2] In *Manual Training Magazine*, July, 1901, page 97.

Digitized by Google

that in which he is the heir of all the ages, and through which he recapitulates the progress of the race. It was certainly a gain for educational theory and practice when appeal to personal and immediate sense perception displaced reliance upon symbols and abstract ideas. But, after all, to have sensations, to receive impressions through sight or hearing, is not the ultimate thing. To do, to perform, to execute, to make, to control and direct activity — it is for the sake of such things that perceptions and impressions exist. Indeed, to see and to hear is more than to have impressions; to see and to hear is to do, to do in coöperation with head, arm, hand, and leg."

In writing along this line, showing the child's interests in the activities of life, Dr. Grant Karr says,[1] " Another one of these centers is the child's occupations. From the day of his birth he has been doing things and has had the unalloyed pleasure of accomplishing things. He has been making things, at first in response to an impulse to act and then later in order to realize an ideal. He has been using hands and feet, arms and legs, eyes and ears, mouth and nose and all his members, in satisfying his wants and needs. From this action and accomplishment, he has profited immensely, for he has not only been making and learning 'things' in the outside world, but he has been building up a structure within, 'a house not made with hands, eternal in the heavens,' the temple of his soul. If his life is to amount to a great deal, this center of his occupations will never diminish

[1] In "The Means of Education," *Journal of Pedagogy*, March, 1905.

Digitized by Google

in strength, but will rather grow in complexity and finer organization until his power to do will be greatly increased and his influence be enlarged not only in his own day and generation, but with the generations that are yet to come. It is so in the great world, for we see on every hand the doers, the men of affairs and influence.

'Men, my brothers, men the workers, ever reaping something new,
That which they have done but earnest of the things that they shall do.'

The inventors, the scholars, the servants, the ministers and teachers, doctors and lawyers, captains of industry, bankers and business men of all sorts, reformers, toilers and labor leaders, and all successful men are all examples of those who, like the little child, do, and *do*, and still DO. They organize their deeds into power, with which they do still greater deeds. This interest is also universal and eternal."

Colonel Francis W. Parker, in showing the value of expression, said:[1] "Evolution has brought us the fundamental doctrine of all thinking, of all discoveries in science, indeed of all progress. A human being is the product of countless generations, reaching down into the beginnings of animal life. The fundamental law of evolution is self-activity. . . . Education is evolution assisted; when man began to help his fellow to grow in body, mind, and soul, education began. We have had

[1] In "Expression in Its Relation to Education," a paper read before the Eastern Manual Training Association, in Buffalo, June, 1901.

Digitized by Google

the doctrine of the survival of the fittest, but now comes the doctrine of fitting every one to survive. The agents of expression must have that exercise, determined by the nature of the body and its growth, which will develop the body as an instrument of the will and make it responsive to the will. . . .

"Without expression growth is absolutely impossible. One kind of expression alone means attenuation. All-sided expression is the foundation of complete living.

"The child enters into the industrial, commercial activity and the life of the world through his hands and his brain. He has very little interest, in general, in things outside his immediate environment, until that interest is stimulated through the work of his hands. To illustrate: Work in wood means images of woodwork, realization of images, interest in all things made of wood, from the simple box to the magnificent structure. The child cannot make an article of furniture without always being more or less interested in furniture."

Quoting again from Colonel Parker,[1] "Making, or manual training, has done more for the human race than the exercise of any, if not all, of the other modes of expression. It is absolutely indispensable to normal physical development; it has had a mighty influence upon brain building; it has cultivated ethics as a basis of all moral growth."

The thought that manual training when properly taught and applied helps to make the pupil a critic of all woodwork and cultivates his æsthetic taste cannot be overestimated. A piece of furniture, or any article for

[1] In "Talks on Pedagogics," page 253.

Digitized by Google

that matter, to be artistic must be made in such a way that its attractions consist in (1) strength, (2) purity of outline, and (3) capacity to fill adequately the functions for which it should be constructed. As Gustav Stickley[1] puts it, the two fundamental principles are *simplicity* and *adaptability to purpose.* On this point of construction Dr. James P. Haney, Director of Manual Training, New York City, says, "The best construction necessarily includes artistic elements, *i.e.* soundness of structure, propriety of material, suitability to purpose, good proportions, and good relationships." Manual training projects to be successful must be worked out with these ideas of construction in mind.

Professor James[2] says:—

"The most colossal improvement which recent years have seen in secondary education lies in the introduction of manual training schools; not because they will give us a people more handy and practical for domestic life and better skilled in trades, but because they will give us citizens with an entirely different intellectual fiber.

"Laboratory work and shop work engender a habit of observation. They confer precision; because, if you are *doing* a thing, you must do it definitely right or definitely wrong. They give honesty; for, when you express yourself by making things, and not by using words, it becomes impossible to dissimulate your vagueness or ignorance by ambiguity. They beget a habit

[1] Editor and publisher of *The Craftsman,* New York and Syracuse.

[2] In "Talks to Teachers," page 35.

Digitized by Google

of self-reliance, they keep the interest and attention always cheerfully engaged, and reduce the teacher's disciplinary functions to a minimum."

In this connection Scripture[1] says: "1. Manual training develops the intellectual side of the mind as nothing else can. 2. Manual training develops character as nothing else can. 3. Manual training furnishes the pupil with real knowledge; it teaches him something. The laboratory method — the method of learning by doing — is after all the only method of learning anything, whether it be drawing, or Greek, or chemistry, or mathematics. The attempt to commit facts to memory by reading books is hopeless. What is memorized in this way fades in a short time, leaving little or no trace." "Two of the direct results of art instruction and manual training," as Professor Charles A. Bennett[2] puts it, "are, first, power to do, and, second, ability to appreciate what is done by others."

The importance of industrial work as a subject which helps to give definite ideas of the value of toil and the real worth of things that are made by the sweat of the brow cannot be overestimated. The rich boy works along with the poor boy, each endeavoring to produce something which will express tangible results. Manual training work to be valuable must be strenuous. Boys must be made to plane and saw and *sweat*. They must produce shavings that have the artistic curl of the crafts-

[1] Edward W. Scripture, in "Manual Training and Mental Development," *Manual Training Magazine*, October, 1899, page 25.

[2] In "The Development of Appreciation," *Manual Training Magazine*, January, 1907.

Digitized by Google

man, not meaningless chips. Shopwork should give ability to plan and execute work according to good technique. "The capacity for work," as Dr. Bagley[1] expresses it, "is the capacity for sustained effort. It means concentration, organization, and permanency of purpose. The intense desire for activity is not in itself sufficient. Children and savages possess this in great abundance. Not activity alone, but sustained and directed activity, has been the keynote of human progress."

Through industrial efforts in education and through other influences at work in the world to-day the time may come when intellect and manual labor will be united. John Ruskin said: "We are always in these days endeavoring to separate intellect and manual labor; we want one man to be always thinking, and another to be always working, and we call one a gentleman, and the other an operative; whereas the workman ought often to be thinking and the thinker often to be working, and both should be gentlemen in the best sense. As it is, we make both ungentle, the one envying, the other despising, his brother; and the mass of society is made up of morbid thinkers and miserable workers."

William Morris expresses the same truth in these words: "I had thought that civilization meant the attainment of peace and order and freedom, of goodwill between man and man, of the love of truth and the hatred of injustice, and, by consequence, the attainment of the good life which these things breed,

[1] In "The Educative Process," New York, 1907, page 102.

Digitized by Google

ek)

ystem. able. easure. scale. easure. outline topics V. ith key. nishing.	24. Review. 25. Kinds of joints, their uses and construction. 26. Selected operations.	28. Review. 29. Planes. 30. Framing square. 31. Level. 32. Calipers. 33. Wire and screw gauge. 34. Turning tools. 35. Carving tools. 36. Miter box. 37. Pliers. 38. Grindstone. 39. Oilstone and slips.

weeks optional)

saws. s. nishing. ndum.	27. Review. 28. Paneling. 29. Doweling. 30. Use of cabinet scraper. 31. Saw sharpening. 32. Truing grindstone. 33. Truing oilstone.	40. Review. 41. Trimmer. 42. Screw and plug bit. 43. Plug cutter. 44. Anvil. 45. Iron vise and saw vise. 46. Picture frame vise. 47. Belt punches. 48. Woodworking machines.

Digitized by Google

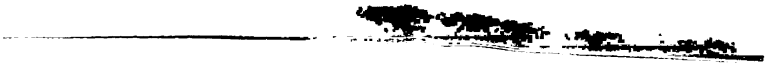

Digitized by Google

a life free from craven fear, but full of incident; that was what I thought it meant, not more stuffed chairs and more cushions, and more carpets and gas, and more dainty meat and drink — and therewithal more and sharper differences between class and class."

Suggestions to Students

1. Provide yourselves with a serviceable apron, or something that will protect your clothing from being soiled.

2. If your locker has a combination lock, learn that combination as soon as possible. Always keep your locker locked when you are not working.

3. There is a place in your bench for each tool. When you finish your work each day, see that each tool is in its proper place in the bench. Also, see that the top of your bench is clean. Order and neatness are very important factors in the formation of desirable habits.

4. Always stand at your bench while you work. Do not sit while working, for you cannot get good results. We must have concentrated and strenuous efforts in order to get the most out of this work.

5. Do not make mistakes. Mistakes always waste time and materials. *Work carefully, thoughtfully, and accurately.* Let the last piece of work be the best that you have done.

6. When you begin a new exercise, say to yourself: "Using all of my powers, I will strive to make this piece of work as nearly perfect as possible." Remember that it is the product (that which you produce) that counts

Digitized by Google

when your worth is estimated. In any vocation or calling in life these questions are always asked: "What can *you* do? How well can you do that thing?" Form the habit now of doing everything well.

7. Try to get some tools of your own, as soon as you can, so that you can work at home. In every home some place can be found where a bench can be placed. Have a little workroom of your own where you can "make things" after school, or on rainy Saturdays. Hundreds of boys have "shops" in the attic, down by the furnace, in vacant rooms, in the barn, or even in the back kitchen. Have such a place in which to work. It will pay you in the end.

8. Find out all that you can about tools, — kinds of tools, uses of tools, and care of tools. Learn the names of all of the parts of each tool. Learn all of the adjustments of each tool. *Always keep your tools sharp.*

9. Study to find out all that you possibly can about all of the materials that you are using, such as woods, screws, nails, glue, stains, etc. Each has interesting matter connected with its use and history.

10. Call tools by their proper names. Use proper language in describing the different processes. Use all of the technical terms that are most commonly used, and see that you use them correctly. Get a few good books and magazines on the work, if you can. Your teacher will gladly recommend good books to you.

11. Remember that you are not doing this work to learn a trade, yet you should strive to do just as good work as an artisan. The purpose of this work for you is to help lay a good foundation for your general education.

Digitized by Google

TOOL LIST*

BENCH NO._____

I. Measuring, Marking, and Testing Tools.		Price
Metric rule,	No.	$ .10
2-ft. rule,	No.	.15
Try-square,	No.	.30
Bevel,	No.	.30
Marking gauge,	No.	.40
Mortise gauge,	No.	.60
Dividers,	No.	.30

II. Edge Tools.		Price
Chisel 1-inch,	No.	$ .60
Chisel ⅞-inch,	No.	.55
Chisel ¾-inch,	No.	.50
Chisel ⅝-inch,	No.	.45
Chisel ½-inch,	No.	.40
Chisel ⅜-inch,	No.	.35
Chisel ¼-inch,	No.	.30
Chisel ⅛-inch,	No.	.25
Sloyd knife,	No.	.40
Jack plane,	No.	1.25
Fore plane,	No.	1.35
Smoothing plane,	No.	1.00

III. Tooth Tools.		Price
Rip saw,	No.	$ 1.50
Cross-cut saw,	No.	1.50
Back saw,	No.	1.00

IV. Boring Tools.		Price
Bit brace,	No.	$ 1.25
Auger bit ¼-inch,	No.	.25
Auger bit ⅜-inch,	No.	.35
Auger bit ½-inch,	No.	.40
Auger bit ⅝-inch,	No.	.50
Countersink,	No.	.15
Screw-driver bit,	No.	.10

V. Pounding Tools.		Price
Hammer,	No.	$ .60
Mallet,	No.	.50

VI. Extras.		Price
Cabinet scraper,	No.	$ .10
Oilstone,	No.	.75
Oil can,	No.	.25
Nail set,	No.	.10
Screw-driver,	No.	.25
Bench brush,	No.	.35

*1. Number each tool. 2. Tools not numbered, mark thus [X]. 3. Missing tools, mark thus [O]. 4. Broken tools, mark thus [B].

I have received the tools as indicated above and agree to take good care of them while I am a member of the class. If I should lose or break a tool, I agree to pay for the same at the close of the term.

_____
Signature of Student

Date_____

Digitized by Google

12. "Which habit do you want to form —

Carefulness or Carelessness?
Neatness or Slovenliness?
Attention or Heedlessness?
Accuracy or Errancy?
Honesty or Deception?
Economy or Wastefulness?
Industry or Idleness?
Success or Failure?" [1]

13. If there are enough individual benches for each student, an official record should be made of the tools in the bench equipment and the student should be held responsible for those tools as well as for the care of the bench. In keeping this record forms similar to the one on the preceding page should be used. The instructor and student should fill two forms for each bench, the student keeping one form and the instructor the other.

Technical Terms

1. "**Blue Print.**" — A drawing which has been made by the blue print process is called a "blue print."

2. **Stock.** — Rough lumber which has been cut to approximate sizes for class use is called stock.

3. **Working Face.** — A surface of a block of wood that has been planed perfectly flat, so that it will lie flat on a flat surface without rocking, is called a working face. It is the surface from which the other surfaces are trued. It is the surface from which measurements are started.

[1] Cree T. Work, "Outlines of Manual Training," San Francisco Public Schools, Teachers' Edition, 1903, page 38.

Digitized by Google

4. **Bottom.** — The surface of a block of wood opposite the working face is called the bottom.

5. **Front Edge.** — The edge nearest the observer is called the front edge. This edge is squared from the working face and is perpendicular to it.

6. **Back Edge.** — The edge farthest from the observer is the back edge. This edge is also squared from the working face and is perpendicular to it.

7. **Right End.** — The end of the block of wood at the right of the observer is called the right end. It is perpendicular to the working face, bottom, and edges.

8. **Left End.** — The end of the block of wood at the left of the observer is called the left end. It is perpendicular to the working face, bottom, and edges.

9. "**Square**" or "**true a Block.**" — To plane a block of wood so that the working face and bottom are parallel to each other and perpendicular to the ends and edges is called "squaring" or "truing a block of wood."

10. "**Lay out Work.**" — To draw lines on wood which represent the form of the different parts of the object and to show the waste parts to be cut away are known as "laying out work."

11. "**Dress down a Surface.**" — To plane perfectly smooth, or to plane a block to desired thickness is called "dressing down a surface."

12. "**Grain,**" "**Across the Grain,**" "**With the Grain,**" **and** "**Against the Grain.**" — These terms refer to the direction of the fibers in the wood that is being worked.

13. "**Object,**" "**Model,**" **or** "**Project.**" — These terms are used in naming that which is to be constructed. The term "model" should be used when the object to be

Digitized by Google

constructed is to be made from a drawing or design of another person. When the pupil designs or helps to design the object to be made, then the term "project" should be used. The term "object" may take the place of the terms "model" or "project." At the present time the term 'project" is the most popular term. These terms may also be defined as follows: —

Object: The name of anything to be constructed. It may be constructed from a model, from a drawing designed by another, or it may be constructed from a drawing made and designed by the teacher and pupil together.

Model: "Anything of a particular form, shape, or construction, intended for imitation." — WEBSTER.

Project: "A project is something of a practical nature thrown out for consideration as to its being done." — WEBSTER.

14. "**Scribe.**" — To draw a line parallel to a straight line, or to draw a curved line from a curved edge, using compasses or dividers, is called "scribing."

15. "**Checks.**" — Cracks in wood extending radially and following pith rays are called "checks."

16. "**Coarse-grained.**" — Trees in which the annual rings are wide give "coarse-grained" lumber.

17. "**Fine-grained.**" — Trees in which the annual rings are narrow give "fine-grained" lumber which is capable of a high polish.

18. "**Bird's-eye Maple.**" — A particular and beautiful contour that is sometimes seen in the grain of maple which has been sawed at a tangent is called "bird's-eye maple."

Digitized by Google

PART I

Woodworking Tools

1. Benches. — One of the most important parts of a manual training equipment is the workbench, and it should be selected with great care. There are very

Fig. 1. — Manual training bench.

many excellent benches on the market at the present time from which selections can be made. One of the best in style and make is shown in Fig. 1. It is practical, substantial, and complete in every way. The same style of a bench may be had in a double bench. A bench serves as a working table. It is supplied with devices

Digitized by Google

to support and to hold wood that is being worked upon. The best benches are provided with cabinets, drawers, or racks to hold tools when not in use. The construction necessarily depends upon the design of the bench. The parts of a bench are the framework, working bed, side vise, tail vise, stops, and cabinet, drawers, and rack to hold tools. The working bed should be made of the

FIG. 2. — Cabinetmaker's bench.

best grade, thoroughly seasoned, hard maple glued up in narrow strips to prevent warping. In fact the best of materials and workmanship should go into the bench in order that it be serviceable and stand the test of climatic conditions.

Fig. 2 shows a cabinetmaker's bench. There should be a few of these benches in every shop for use when heavy work is done. These benches may also be obtained with cabinet or drawers underneath.

Digitized by Google

A workbench should receive proper care at all times. Great care should be exercised in the use of saws and chisels and auger bits not to cut or mar the bench. At the close of each lesson the vises should be closed, the bench and tools should be dusted, and the tools should be put away in their proper places so that the bench is left perfectly clean and in order.

Standards of Measure and Tools used in Measuring and Testing

2. **English Measure.** — The usefulness of a system of measure depends upon the unvarying identity of its unit together with its terminations. History informs us that from the earliest periods of civilization the unit of all systems of measure has been fixed by law or custom. In early periods there were many systems, and the multiplicity of systems of measure naturally led to much embarrassment to the commerce of the world. To transform values in trade from one system to another has always been a difficult task in regulating trade between nations.

The term "foot" has been in use for more than 2000 years, but with different meanings, having its origin in the republics of ancient Greece and the Roman Empire. Tradition tells us that the Olympic foot was derived from the length of the foot of the mythological Hercules. The Greeks also had several other foot measures differing in length. These varying standards of length in early periods were the causes of much trouble in the exchange of commodities.

Digitized by Google

The unit of English measure is the yard. It was recommended by the Royal Society and became a legal standard Jan. 1, 1826. Part of the statute is as follows:

"The straight line or distance between the centers of the two points in the gold studs in the straight brass rod now in the custody of the clerk of the House of Commons, whereon are the words and figures 'Standard Yard, 1760,' shall be, and is hereby declared to be, the unit, or only measure of extension whatsoever, whether the same be linear, superficial, or solid, shall be derived, computed, and ascertained."

In case such standard be lost or injured in any way, the act provided that it should be restored by referring to the length of "the pendulum vibrating seconds of mean time in the latitude of London in a vacuum at the level of the sea." The length of this pendulum was declared to be 39.1393 inches.

The House of Parliament was destroyed by fire in 1834 and the standard yard was lost. A commission was appointed in 1838 to restore the standard. The commission reported that a standard bar of gun metal, 38 inches long and 1 inch square, the distance between two lines on which, crossing two gold studs, is one yard, at 62° F. and 30 inches atmospheric pressure. This standard was legalized in 1878.

In 1814 a brass scale by Troughton, of London, was obtained by the United States Coast and Geodetic Survey. This scale was 82 inches long and the part from the 27th to the 63d inch line was adopted as the unit of length. In 1830 the United States Treasury Department adopted the Troughton scale as a standard of

Digitized by Google

length. The Constitution of the United States provides that:—

"The Congress shall have power to fix the standards of weights and measures." (Art. I., Sec. 8, Cl. 5.)

For table of linear measure see Appendix B.

3. **The Metric System.** — Some one has said that the metric system is a product of the French Revolution. By a law passed on Aug. 1, 1793, the metric system was established as the only legal standard of weights and measures for France and the French possessions. The system has since been adopted by Mexico, Brazil, Chile, Peru, and by all European nations except Russia and Great Britain, and its use is permitted in these nations. The population of the countries in which this system has been legalized aggregate about 350,000,000, or about one-fourth the entire population of the earth. Its value and usefulness is in the simplicity of its multiples.

The Metric System was legalized in the United States by Congress, July 27, 1866. Part of the act is as follows:

"The tables in the schedule hereto annexed shall be recognized in the construction of contracts, and in all legal proceedings, as establishing, in terms of the weights and measures now in use in the United States, the equivalents of the weights and measures expressed therein in terms of the metric system, and the tables may lawfully be used for computing, determining, and expressing in customary weights and measures the weights and measures of the metric system."

The units of the metric system are as follows: 1. The unit of length is the *meter*. It is nearly the ten-millionth

Digitized by Google

part of a quadrant of a meridian, or the distance between the equator and a pole. It is also defined as the distance between two lines on a platinum-iridium bar at zero degree Centigrade. This bar is deposited in the International Bureau of Weights and Measures, Paris, France. 2. The unit of surface is the *are*. 3. The unit of capacity is the *liter*. 4. The unit of solidity is the *stere*. 5. The unit of weight is the *gram*.

The tables with their values, multiples, and submultiples referred to in the above act are found in Appendix B.

4. Rule. — A rule is an instrument or tool used in measuring. Its graduations are recorded in inches,

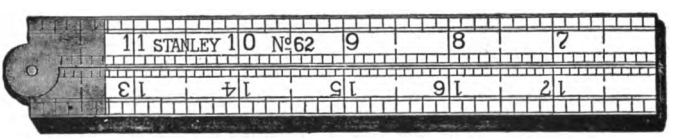

Fig. 3. — Rule. Boxwood, two-feet, four-fold, square joint, bound.

halves, quarters, eighths, and sixteenths. For convenience in shop practice, a rule is made to fold, such as "fourfold," "sixfold," etc. Rules are also made in different lengths, but the most common size is the 2-foot, fourfold length. For accurate measuring a rule should be held on its edge against the object to be measured, so that the graduations on the rule can be located exactly. Rules are usually made of boxwood which has been thoroughly seasoned. Some of the more expensive rules are made of genuine ivory, but these are not practical in a manual training equipment on account of their expense.

Digitized by Google

5. Try-square. — The try-square is used in laying out work and in testing faces, edges, and ends to see that they are true. In testing a block of wood to see whether a face and an edge are true or not, the handle of the try-square should be placed firmly against the face and then slid down until the blade touches an adjoining edge. If the face and edge fit the try-square perfectly, they are "true" to each other, *i.e.* they form a right angle. The parts of the try-square are the blade (*a*) and handle (*b*). These parts are riveted firmly together so that they form a right angle. The blade is graduated in inches, halves, quarters, and eighths. Try-squares may also be obtained graduated in the metric system. The blade differs in length from 2 to 12 inches. A 6-inch blade is about the right size for all practical purposes. The handle of the one shown in Fig. 4 is nickel-plated. The handle is sometimes made of rosewood and having a brass face plate to protect the wood. These are more expensive than nickel-plated handles.

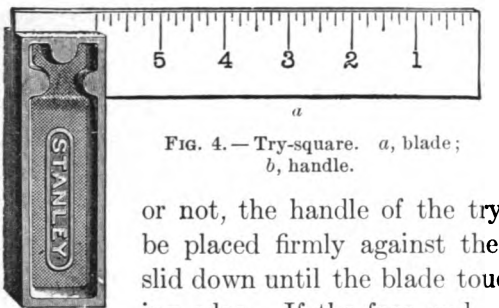

FIG. 4. — Try-square. *a*, blade; *b*, handle.

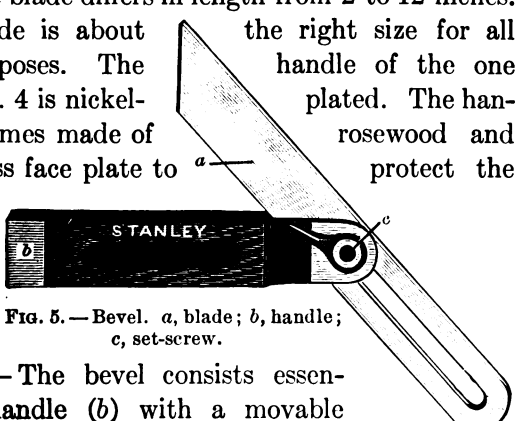

FIG. 5. — Bevel. *a*, blade; *b*, handle; *c*, set-screw.

6. Bevel. — The bevel consists essentially of a handle (*b*) with a movable

Digitized by Google

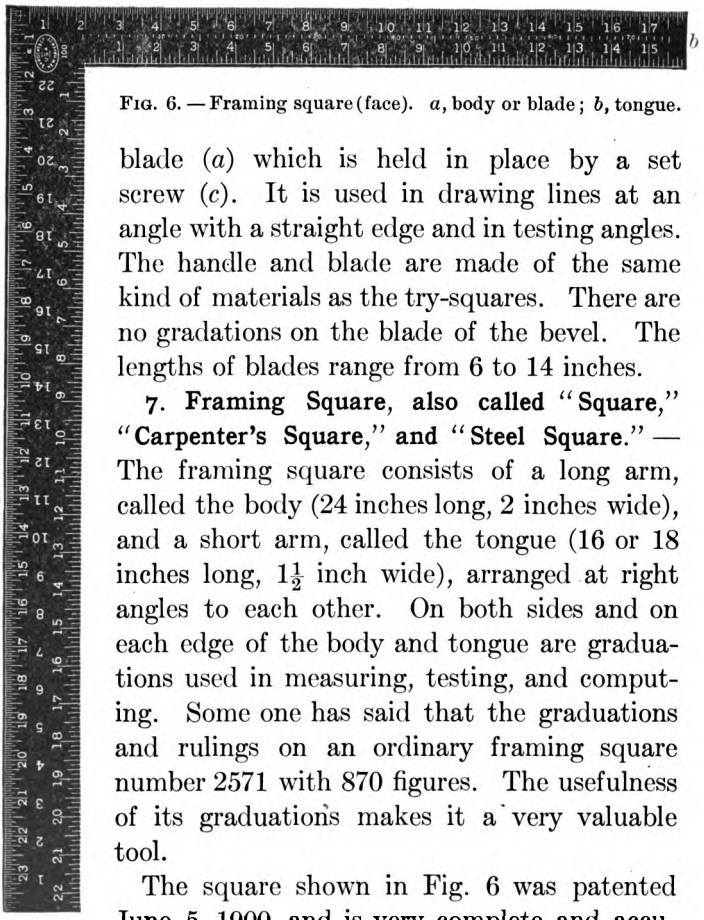

FIG. 6. — Framing square (face). *a*, body or blade; *b*, tongue.

blade (*a*) which is held in place by a set screw (*c*). It is used in drawing lines at an angle with a straight edge and in testing angles. The handle and blade are made of the same kind of materials as the try-squares. There are no gradations on the blade of the bevel. The lengths of blades range from 6 to 14 inches.

7. **Framing Square, also called "Square," "Carpenter's Square," and "Steel Square."** — The framing square consists of a long arm, called the body (24 inches long, 2 inches wide), and a short arm, called the tongue (16 or 18 inches long, $1\frac{1}{2}$ inch wide), arranged at right angles to each other. On both sides and on each edge of the body and tongue are graduations used in measuring, testing, and computing. Some one has said that the graduations and rulings on an ordinary framing square number 2571 with 870 figures. The usefulness of its graduations makes it a very valuable tool.

The square shown in Fig. 6 was patented June 5, 1900, and is very complete and accurate. It gives the PATENT RAFTER TABLE, used in determining the length of rafters for any one of seven pitches of roof and for buildings of any width; the BRACE MEASURE, which gives the length of common

Digitized by Google

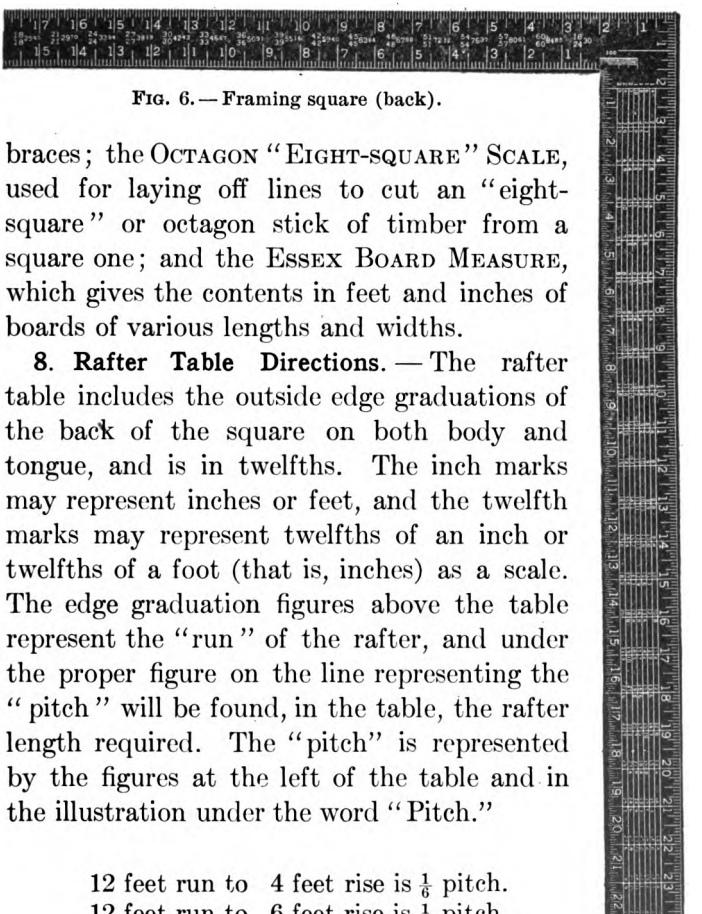

FIG. 6. — Framing square (back).

braces; the OCTAGON "EIGHT-SQUARE" SCALE, used for laying off lines to cut an "eight-square" or octagon stick of timber from a square one; and the ESSEX BOARD MEASURE, which gives the contents in feet and inches of boards of various lengths and widths.

8. Rafter Table Directions. — The rafter table includes the outside edge graduations of the back of the square on both body and tongue, and is in twelfths. The inch marks may represent inches or feet, and the twelfth marks may represent twelfths of an inch or twelfths of a foot (that is, inches) as a scale. The edge graduation figures above the table represent the "run" of the rafter, and under the proper figure on the line representing the "pitch" will be found, in the table, the rafter length required. The "pitch" is represented by the figures at the left of the table and in the illustration under the word "Pitch."

12 feet run to 4 feet rise is $\frac{1}{6}$ pitch.
12 feet run to 6 feet rise is $\frac{1}{4}$ pitch.
12 feet run to 8 feet rise is $\frac{1}{3}$ pitch.
12 feet run to 10 feet rise is $\frac{5}{12}$ pitch.
12 feet run to 12 feet rise is $\frac{1}{2}$ pitch.
12 feet run to 15 feet rise is $\frac{5}{8}$ pitch.
12 feet run to 18 feet rise is $\frac{3}{4}$ pitch.

Digitized by Google

The Run of a rafter set up in place is the horizontal measure from the extreme end of the foot to a plumb line from the ridge end. From A to B.

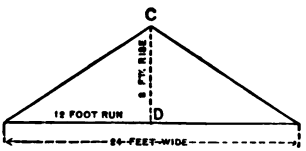

The Rise is the distance from the top of the ridge end of the rafter to the level of the foot. From C to D.

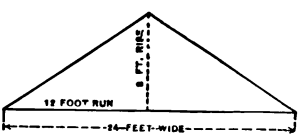

The Pitch is the proportion that the rise bears to the whole width of the building. The above illustration shows ⅓ pitch; the rise of 8 feet being ⅓ of the width of the building.

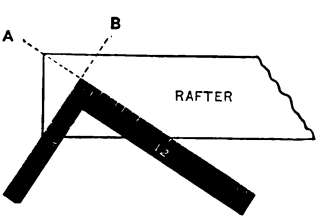

The Cuts or angles of a rafter are obtained by applying the square so that the 12-inch mark on the body and the mark on the tongue that represents the rise shall both be at the edge of the rafter. The illustration shows 8-foot rise, the line A the cut for the foot end of rafter and B the cut for ridge end.

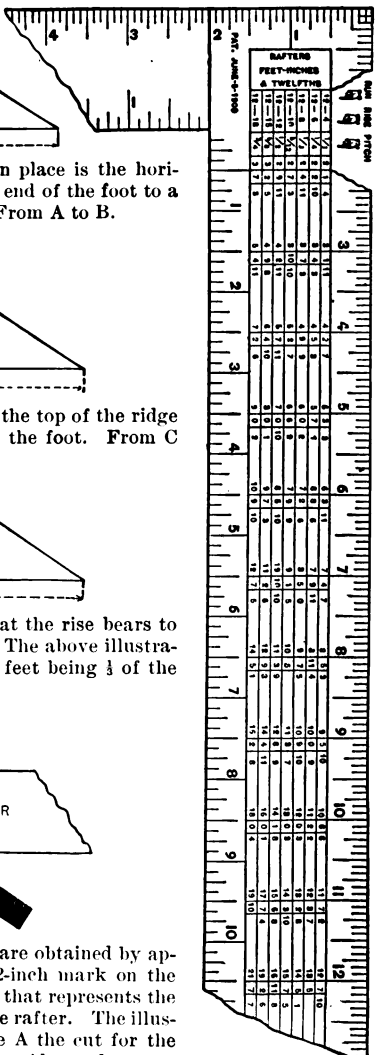

FIG. 7. — Rafter table.

Digitized by Google

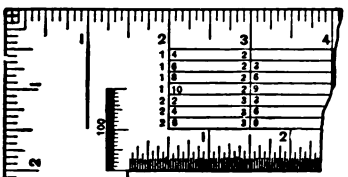

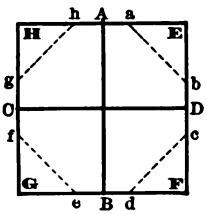

FIG. 8. — Brace measure.

TO FIND THE LENGTH OF A RAFTER

For a roof with $\frac{1}{6}$ pitch (or the "rise" $\frac{1}{6}$ the width of the building) and having a "run" of 12 feet: follow in the rafter table the upper or $\frac{1}{6}$ pitch ruling, find, under the graduation figure 12, the rafter length required, which is 12 7 10, or 12 feet $7\frac{10}{12}$ inches.

If the "run" is 11 feet, and the "pitch" $\frac{1}{2}$ (or the "rise" $\frac{1}{2}$ the width of the building), then the rafter length will be 15 6 8, or 15 feet $6\frac{8}{12}$ inches. If the "run" is 25 feet, add the rafter length for "run" of 23 feet to the rafter length for "run" of 2 feet.

When the "run" is in inches, then in the rafter table read inches and twelfths instead of feet and inches. For instance: if with $\frac{1}{2}$ pitch the "run" is 12 feet 4 inches, add the rafter length of 4 inches to that of 12 feet, as follows:—

For "run" of 12 feet the rafter length is	16 ft. $11\frac{8}{12}$ in.
For "run" of 4 inches the rafter length is	$5\frac{8}{12}$ in.
Total	17 ft. $5\frac{4}{12}$ in.

Digitized by Google

The "run" of 4 inches is found under the graduation "4" and is 5 7 11, which may be read $5\frac{8}{12}$ inches. If it were feet, it would read 5 feet, $7\frac{11}{12}$ inches.

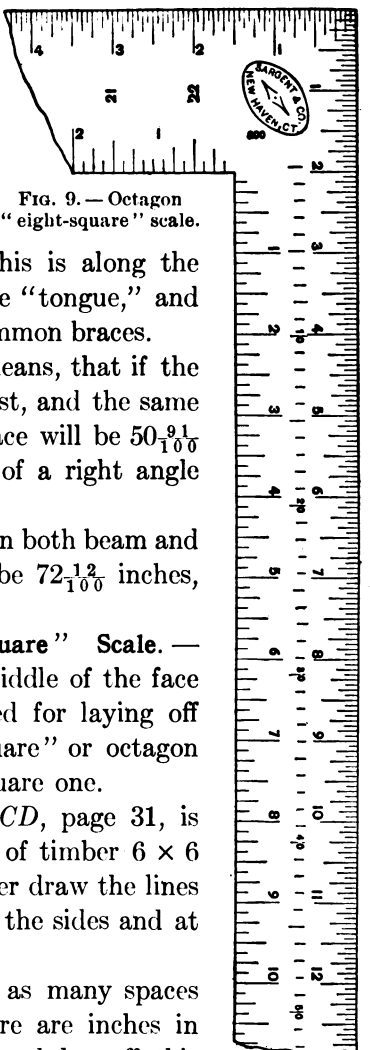

FIG. 9. — Octagon "eight-square" scale.

9. Brace Measure. — This is along the center of the back of the "tongue," and gives the length of the common braces.

$\frac{36}{36}$ 50 91 — in the scale means, that if the run is 36 inches on the post, and the same on the beam, then the brace will be $50\frac{91}{100}$ inches, or the hypotenuse of a right angle triangle.

If the run is 51 inches on both beam and post, then the brace will be $72\frac{12}{100}$ inches, and so on.

10. Octagon "Eight-square" Scale. — This scale is along the middle of the face of the tongue, and is used for laying off lines to cut an "eight-square" or octagon stick of timber from a square one.

Suppose the figure *ABCD*, page 31, is the butt of a square stick of timber 6 × 6 inches. Through the center draw the lines *AB* and *CD*, parallel with the sides and at right angles to each other.

With the dividers take as many spaces (6) from the scale as there are inches in the width of the stick, and lay off this

Digitized by Google

space on either side of the point *A*, as *Aa* and *Ah*; lay off in the same way the same space from the point *B*, as *Bd*, *Be*; also *Cf*, *Cg* and *Db*, *Dc*. Then draw the lines *ab*, *cd*, *ef*, and *gh*. Cut off the solid angle *E*, also *F*, *G*, and *H*; this will leave an octagon or "eight-square" stick. This is nearly exact.

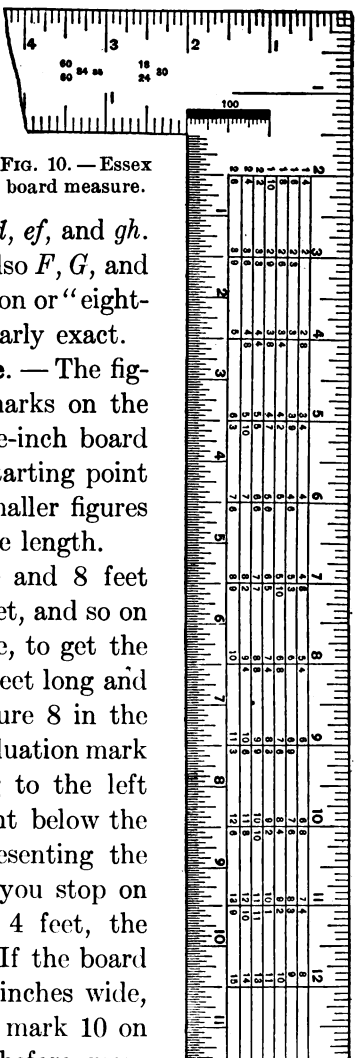

FIG. 10. — Essex board measure.

11. Essex Board Measure. — The figure 12 in the graduation marks on the outer edge represents a one-inch board 12 inches wide and is the starting point for all calculations; the smaller figures under the 12 represent the length.

A board 12 inches wide and 8 feet long measures 8 square feet, and so on down the table. Therefore, to get the square feet of a board 8 feet long and 6 inches wide, find the figure 8 in the scale under the 12-inch graduation mark and pass the pencil along to the left on the same line to a point below the graduation mark 6 (representing the width of the board), and you stop on the scale at 4, which is 4 feet, the board measure required. If the board is the same length and 10 inches wide, look under the graduation mark 10 on a line with the figure 8 before men-

Digitized by Google

tioned, and you find $6\frac{8}{12}$ feet board measure. If 18 inches wide, then to the right under the graduation mark 18, and 12 feet is found to be the board measure. If 13 feet long and 7 inches wide, find 13 in the scale under the 12-inch graduation, and on the same line under the 7-inch graduation will be found $7\frac{7}{12}$ feet board measure. If the board is half this length, take half of this result; if double this length, then double the result. For stuff 2 inches thick double the figures.

In this way the scale covers all lengths of boards, the most common, from 8 feet to 15 feet, being given.

12. **History of the Framing Square.** — The square was used by the ancient Greeks and Romans. Pliny said that the square and level were invented by Theodorus, a Greek of Samos; but this cannot be true, for the ancient Egyptians must have had and used these tools in the building of the Pyramids. Theodorus may have made improvements in the square and level, and probably discovered new problems in which they could be used. Prehistoric nations must have used them or similar tools also, for evidences of their use are found in the ruins of prehistoric races. A story of the history of tools is a story of the history and development of the race.

FIG. 11. — Plumb and level.

13. **Plumb and Level.** — A plumb and level consists of two level glasses mounted as shown in Fig. 11. The

Digitized by Google

level glasses are mounted in cherry, mahogany, or rosewood blocks, or in a built-up metallic frame. When only one level glass is used, as in Fig. 12, it is called a level, or a "spirit level." A plumb and level is used in testing horizontal and perpendicular surfaces.

FIG. 12. — Level.

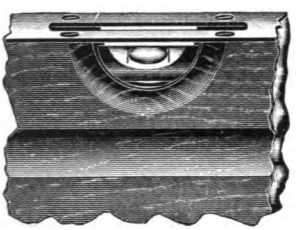

FIG. 13. — Level glass (showing setting).

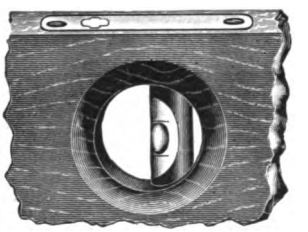

FIG. 14. — Plumb glass (showing setting).

14. **Marking Gauge.** — The marking gauge (Fig. 15) is used in drawing a line parallel with a straight edge. The parts are called the bar, head, thumbscrew, and point. The bar has graduations in inches. The head and bar are made of apple wood, mahogany, boxwood, or rosewood, while the point is made of steel.

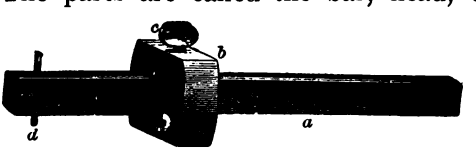

FIG. 15. — Marking gauge. *a*, bar; *b*, head; *c*, thumbscrew; *d*, point.

15. **Mortise Gauge.** — The mortise gauge (Fig. 16) is used in drawing two parallel lines parallel with a straight

Digitized by Google

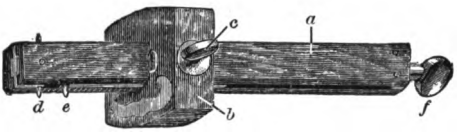

FIG. 16. — Mortise gauge. *a*, bar; *b*, head; *c*, thumbscrew; *d*, fixed point; *e*, movable point; *f*, set screw for movable point.

edge. It is constructed like a marking gauge except that it has two points, one fixed and a movable point. Its principal use is in the making of mortise and tenon joints, from which its name is derived.

16. Gauge Attachment. — Fig. 17 shows a Stanley improved gauge with patent attachment. The object of this attachment is to enable one to run a gauge line with perfect steadiness and accuracy around curves of

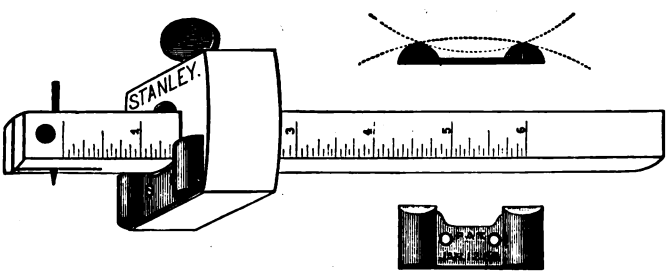

FIG. 17. — Stanley gauge with patent attachment.

any degree, and either concave or convex. It will be observed that the gauge head is reversible, and the flat side can be used for ordinary work. The patent attachment can, however, be used on nearly every make of gauges.

17. Dividers or Compasses. — Dividers or compasses are used in dividing lines, in describing arcs and circles, in measuring figures, and in scribing. The term "dividers" is usually applied to the instrument made use

Digitized by Google

of by draughtsmen, while "compasses" are made use of by mechanics. Either term, however, is correct. The

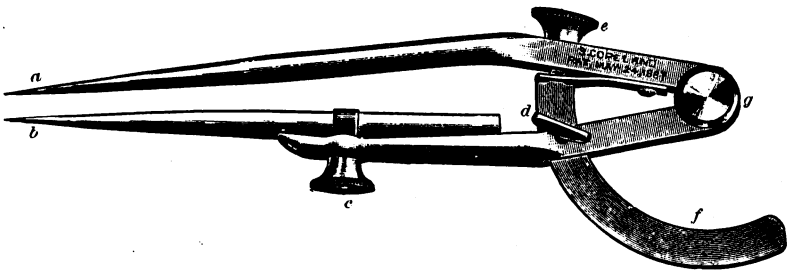

FIG. 18. — Copeland dividers with one movable point. *a*, fixed point; *b*, movable point; *c*, *d*, *e*, set screws; *f*, arc; *g*, joint.

construction and parts are shown in Fig. 18. In working at the bench great care should be exercised not to lose any of the set screws.

18. Calipers. —Calipers are instruments having curved legs which are used in measuring the caliber, or di-

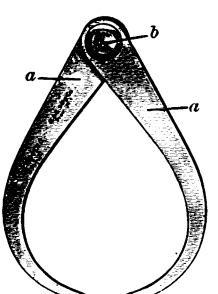

FIG. 19. — Outside calipers. *a*, legs; *b*, joint.

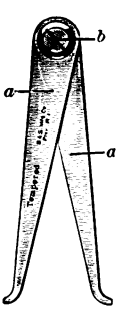

FIG. 20. — Inside calipers. *a*, legs; *b*, joint.

ameter, of round bodies. Outside calipers are used for outside measuring, while inside calipers are used for

Digitized by Google

inside measuring. They are indispensable in wood turning, but have little use in bench work. The legs are made of steel and are usually polished. The measuring points should come together evenly for accurate work.

19. Wire Gauge. — The wire gauge is used in measuring wire, nails, etc. There is a lack of uniformity in wire gauges in the United States. The following different standards are in use. American or Brown and Sharp, Birmingham or Stubs' Wire, Washburn and Moen Manufacturing Company, Imperial Wire Gauge, and United States Standard. For tables of sizes and standards see Appendix B.

FIG. 21. — Wire gauge.

EDGE TOOLS

20. Sloyd Knife. — A sloyd knife should be made of the finest grade of tool steel, highly tempered, having an extra strong blade with a thick back, and having a handle that fits the hand with an easy grip. A No. 7

Digitized by Google

sloyd knife with a $2\frac{1}{2}$-inch blade is an excellent knife for bench work, and for knife work.

FIG. 22. — Sloyd knife, No. 7.

21. **Socket Firmer-chisel.** — The socket firmer-chisel is used as a paring tool in making joints, in reducing blocks to desired shapes, and in chamfering. The body of the chisel is made of the best tool steel, properly tempered, and carefully made. The chisel is ground with two bevels on the same side, a broad bevel ground with a grindstone, and a short bevel ground with an oilstone.

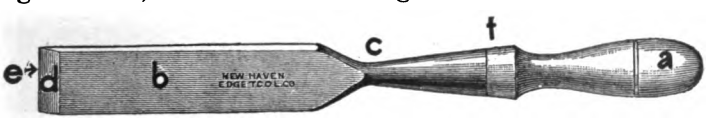

FIG. 23. — Socket firmer-chisel. *a*, handle; *b*, blade; *c*, shank; *d*, bevel; *e*, cutting edge; *f*, socket.

The handles are made of wood, hickory being the best. Other woods are sometimes used, such as apple wood, dogwood, beech, cherry, rosewood, cocobola, boxwood, mahogany, ebony, lignum-vitæ, etc. Most of the fancy woods named are used in making the handles of carving tools. The chisel handle, being made of wood, should not be struck with a hammer, but with a mallet when necessary. *Always use wood to drive wood and steel to drive steel.* The general run of carpentry and building mechanics prefer the socket handle chisel.

22. **Tang Firmer-chisel.** — This style of chisel is preferred by joiners, cabinetmakers, pattern makers,

Digitized by Google

and those engaged in the finer class of woodworking. They are better balanced, hang better, and cut nicer than the socket chisels, but are more easily broken. A ferrule handle is used on this style of chisel. The term "firmer" refers to the manner in which the tool is made

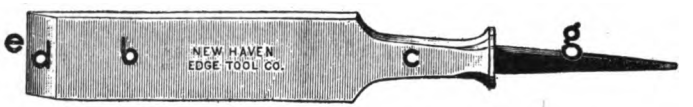

FIG. 24. — Tang firmer-chisel. *b*, blade; *c*, shank; *d*, bevel; *e*, cutting edge; *g*, tang.

and the material out of which it is made. Firmer-chisels have blades wholly of tool steel, while in some kinds of chisels iron blades overlaid with steel are used. Firmer-chisels should be used in manual training work. They are made in sizes from $\frac{1}{4}''$ to $2''$.

23. Corner Chisel. — This chisel, as its name suggests, is used in cutting out corners. Its use in manual training is not very extensive; still, there should be a few of them in every shop equipment.

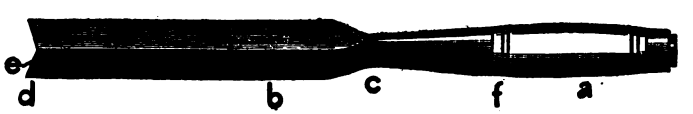

FIG. 25. — Corner chisel. *a*, handle; *b*, blade; *c*, shank; *d*, bevel; *e*, cutting edge; *f*, socket.

24. Gouge. — A gouge is used in wood turning, in gouging, and in carving. The blade is curved, giving a curved cutting edge. The shape of the cutting edge is called the sweep, as "regular sweep," "middle sweep," and "flat sweep." A gouge, like a chisel, is made in

Digitized by Google

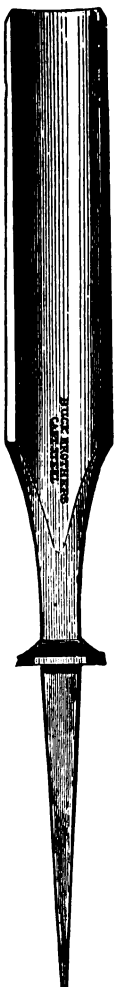

Fig. 26.—Tang firmer-gouge.

Fig. 27.—Turning chisel.

Fig. 28.—Turning gouge.

Fig. 29.—Parting tool.

Digitized by Google

different sizes and shapes and with either socket or tang handles.

25. Wood-turning Tools. — The cutting tools used in wood turning are the turning chisel, turning gouge, and parting tool. These are made in different sizes.

26. Wood-carving Tools. — There are many sizes and shapes of tools used in wood carving. For names, cuts, and the sweep of each tool see Figs. 30–35. Carving sets may be obtained put up in neat boxes for home use.

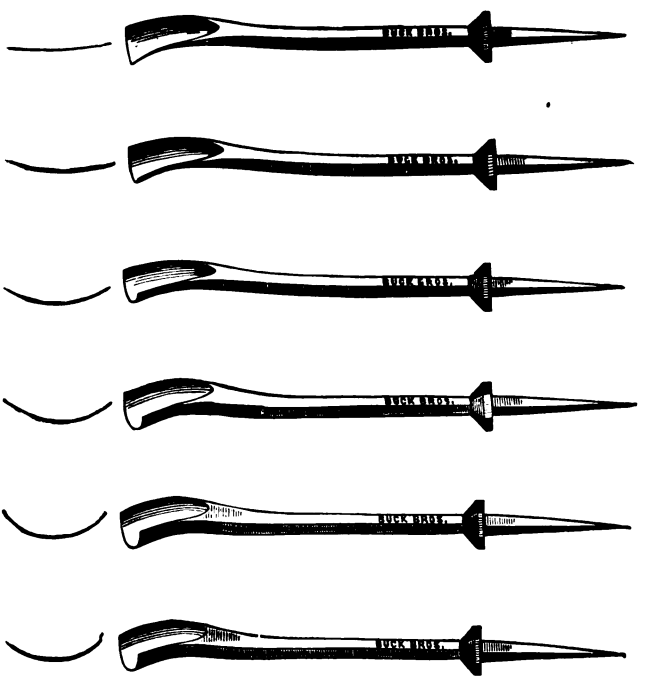

FIG. 30. — Back bent gouges.

Digitized by Google

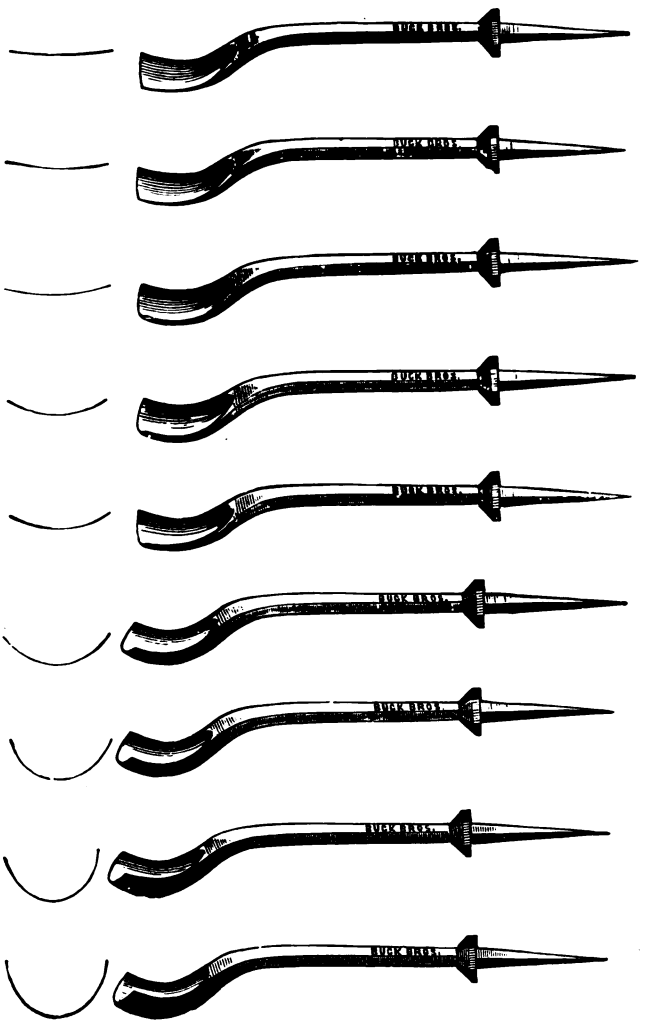

FIG. 31. — Front bent gouges.

Digitized by Google

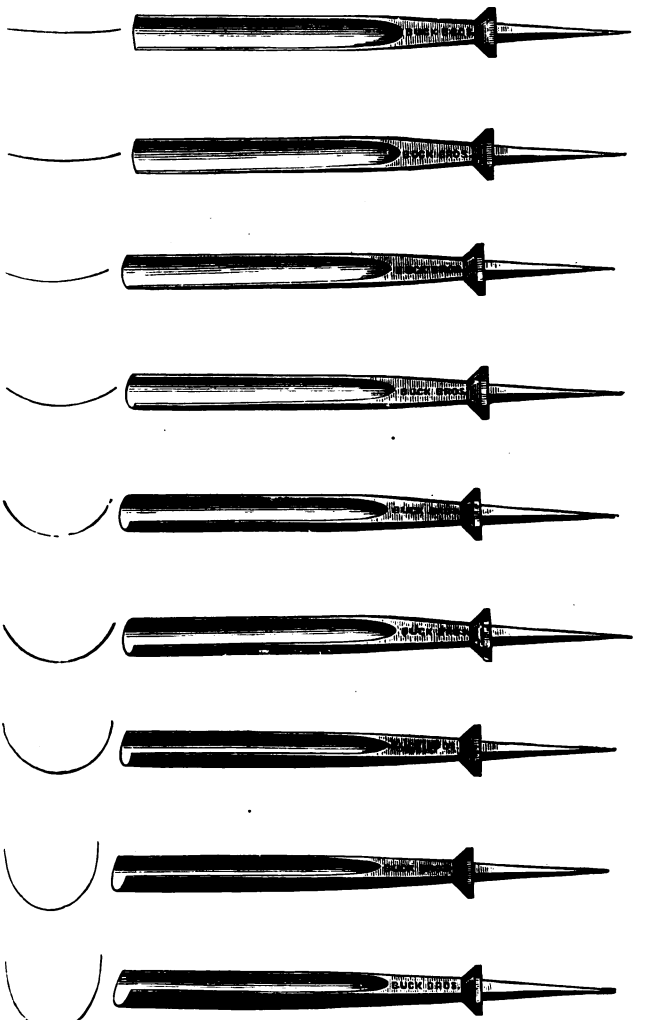

FIG. 32. — Straight gouges.

Digitized by Google

FIG. 33. — Curved gouges.

Digitized by Google

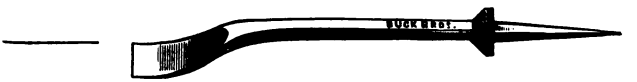

Front bent chisel.

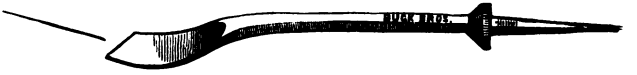

Right corner chisel.

Left corner chisel.

Carving chisel.

Skew carving chisel.

FIG. 34.

Digitized by Google

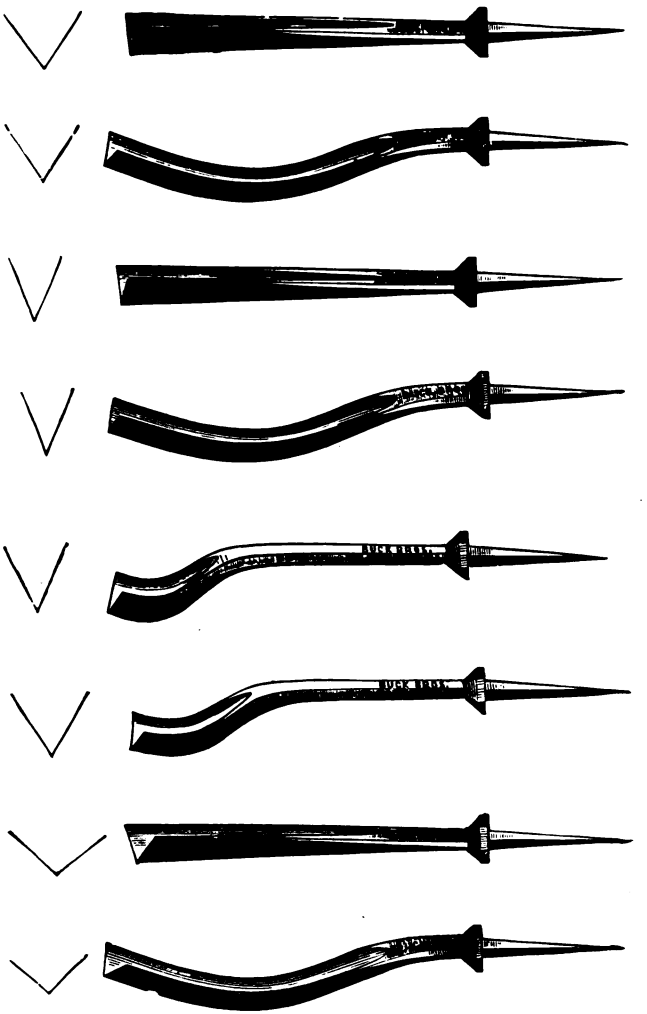

FIG. 35. — Parting tools.

Digitized by Google

27. Planes. — One of the most important parts of a manual training equipment are the planes. Students as

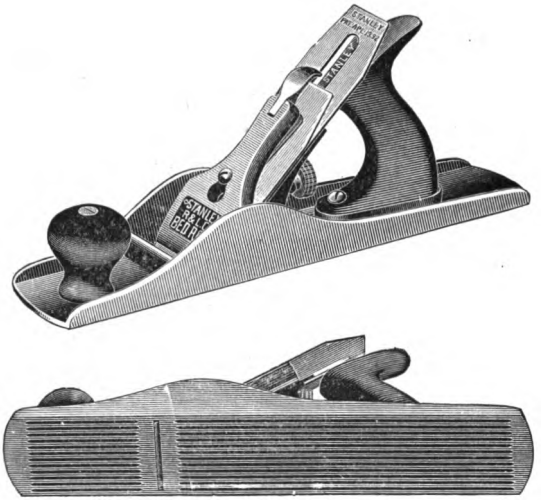

FIG. 36. — Fore plane (showing corrugated bottom).

a rule find difficulty in mastering the uses and the adjustments of these tools, and too much emphasis cannot be put upon a proper study of them. They should be properly sharpened, carefully set, and used correctly. Usually, in woodworking outfits, are found a jack plane for rough planing, a fore plane for truing

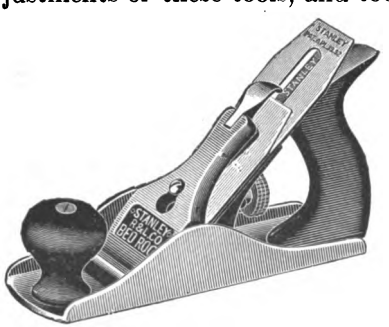

FIG. 37. — Smooth plane.

Digitized by Google

long surfaces, and a smooth plane for planing broad surfaces and end wood; but in manual training work the fore plane, smooth plane, and block plane are used. The planes shown in Figs. 36, 37, and 38 are iron planes, but some woodworkers prefer wood bottom planes, shown in Fig. 39. There are many kinds of planes in use for different purposes. Among these we note the following: smooth, jack, fore, jointer, block, circular, belt maker's, low angle block, rabbet, bull-nose rabbet, core-box, chamfer, scrub, dado, double-end match, beading, piano maker's, etc.

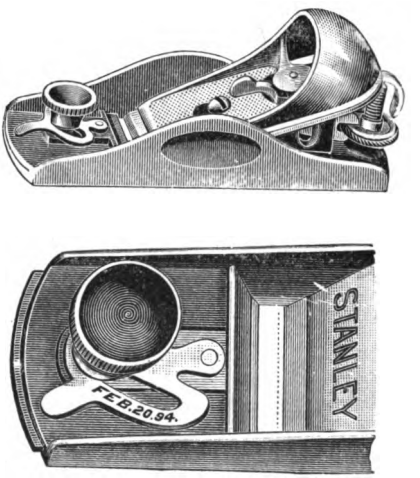

FIG. 38. — Knuckle joint block plane, showing patent throat adjustment.

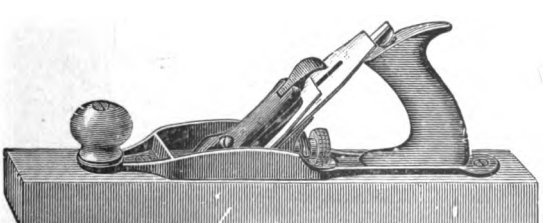

FIG. 39. — Wood bottom plane.

Digitized by Google

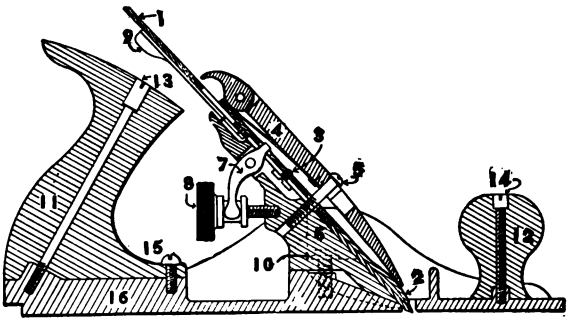

Sectional elevation of Bailey iron plane.

LIST OF PARTS OF BAILEY PLANES.

1. Plane iron.
2. Plane iron cap.
3. Plane iron screw.
4. Cap.
5. Cap screw.
6. Frog.
7. "Y" adjustment.
8. Brass adjusting nut.
9. Lateral adjustment.
10. Frog screw.
11. Handle.
12. Knob.
13. Handle "bolt and nut."
14. Knob "bolt and nut."
15. Handle screw.
16. Bottom (iron plane).
35. Top casting (wood plane).
36. Bottom (wood plane).

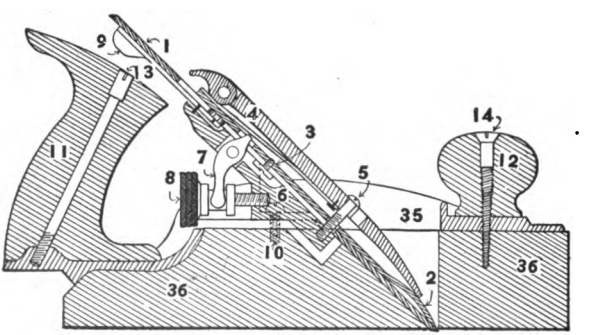

Sectional elevation of Bailey wood plane.

FIG. 40.

Digitized by Google

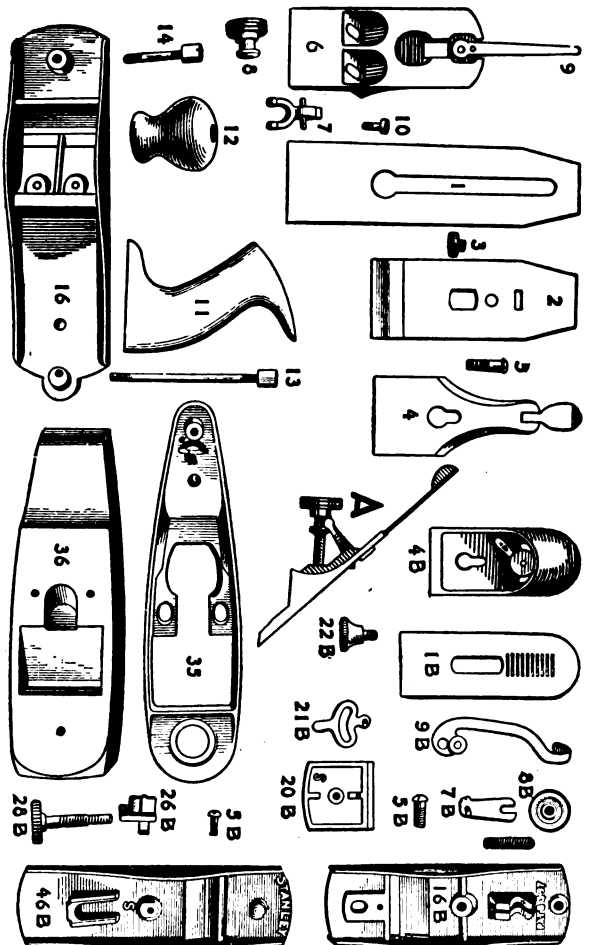

Parts of Bailey planes.

Digitized by Google

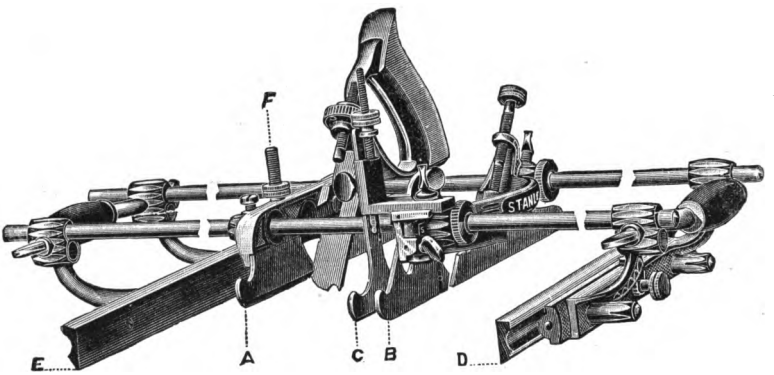

FIG. 41. — Stanley patent universal plane.

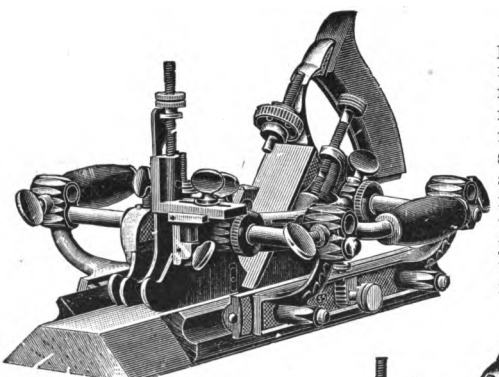

As a chamfer plane.

This plane comprises a plow, dado, rabbet, beading, reeding, fluting, round, hollow, sash, match, filletster, slitting, chamfer, and general moulding plane in one tool, is easily adjusted, and can be used for a great variety of work.

By means of the patent adjustable bottom and the auxiliary center bottom it is possible to use a cutter of practically any shape with this plane. The directions which accompany each tool are readily understood. The plane is nickel-plated and has 52 cutters.

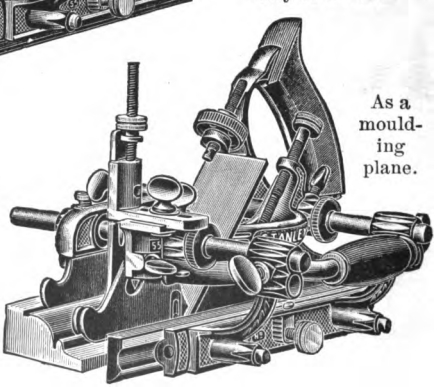

As a moulding plane.

Digitized by Google

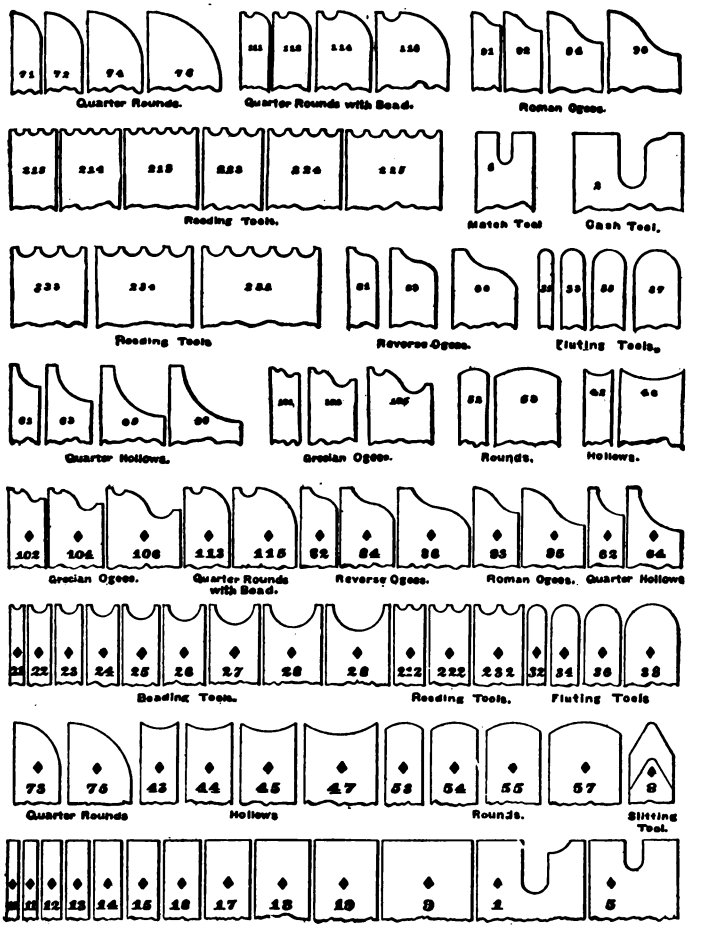

FIG. 42. — Cutters for Stanley universal plane.

Digitized by Google

28. Spokeshave. — This is a very useful tool in a bench equipment. It is used in making handles and in working on curved surfaces. Spokeshaves differing in

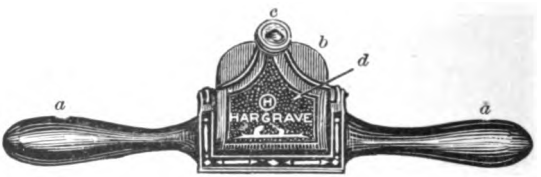

FIG. 43. — Spokeshave. *a*, handle; *b*, blade; *c*, set screw; *d*, cap iron.

shape (convex or concave) are made for convex and concave cutting. These shaves are especially useful to stair builders, pattern makers, and carriage makers. The spokeshave should never be used for doing work that can be done with a plane.

29. Metal Snips. — Metal snips are used in cutting sheet metals. They are indispensable in bent iron and

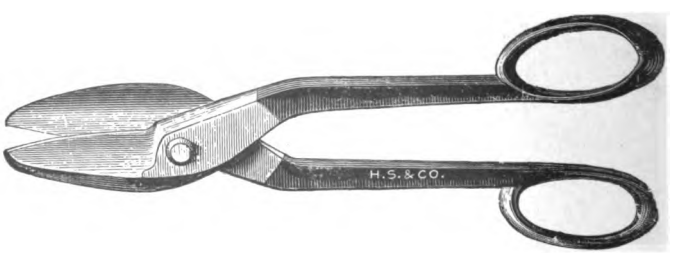

FIG. 44. — Metal snips.

sheet metal work. Snips are made in different sizes. There are many kinds of snips which are used for various purposes.

Digitized by Google

Tools with Teeth

30. Saws and their Construction. — Saws are classified as *reciprocating in action* and *continuous in action.* A reciprocating saw has a straight cutting edge, or an edge that is slightly curved, while the continuous saws are the circular saws and the band saws. Saws are made from the best steel saw plates. In early times these plates were imported from England, but now most of the American saws are made from American saw plate. The processes involved in the making of the best saws are as follows: 1. Tempering, giving hardness and toughness to the blade. 2. Smithing or hammering, making the plate level and toughening the steel. 3. Grinding, giving a uniform thickness, or a tapering thickness. 4. Polishing, causing the saw to run easily. 5. Punching of teeth, giving shape to the teeth. 6. Jointing, setting, and filing, giving a proper cutting edge. 7. Etching, giving the maker's name, address, trade-mark, etc. 8. Handling, fitting well-shaped handles to give the saw the proper "hang." 9. Blocking, the final operation to make the saw straight and level.

Nearly every element that enters into the construction of a saw tends to give efficiency to the tool, and that efficiency is measured by the amount of force required to do a given amount of work. The cut which a saw makes in wood is called the "kerf." A thick blade will make a wider kerf than a thin blade, and more force is required in using a thick blade. The bending of the saw teeth a little (one to the right, and the next to the left, etc.) by means of a saw set is what gives "set" to a saw.

Digitized by Google

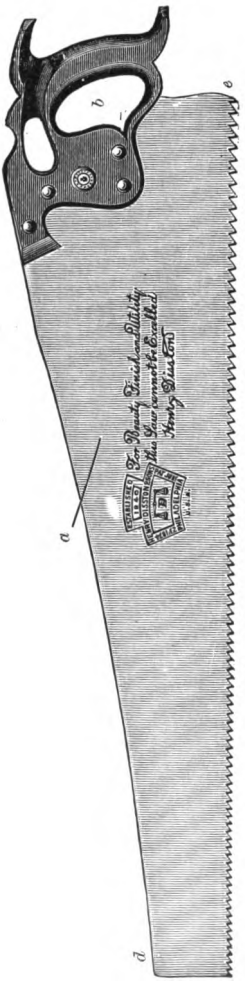

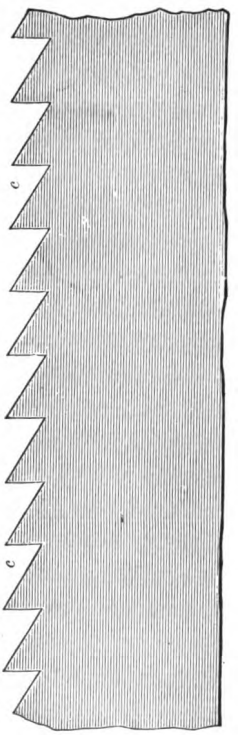

FIG. 45.—Rip saw. *a*, blade; *b*, handle; *c*, teeth; *d*, tip; *e*, heel.

Digitized by Google

The amount of set also determines the width of the kerf. In sawing hard woods little set is required, while in sawing soft and spongy woods more set is required.

31. **Rip Saw.** — A rip saw is a saw having teeth especially adapted for dividing wood in a direction parallel to its fibers. It is used for sawing with the grain of wood. The teeth are nothing less than a series of small chisels arranged so that each tooth does its own share of the cutting. It will be observed in Fig. 45 that the teeth of the rip saw slant forward. This shape is one of the chief characteristics of the rip saw, for it gives efficiency to the tool in splitting the fibers. The cuts in Fig. 46 are full size of the respective number of teeth and points per inch which they represent. A "3-point" saw is a saw having three points to the inch but not three teeth to the inch. A "3-point" saw has two teeth to the inch. It will be observed that in one inch of space there is always one tooth less than there are points.

32. **How to sharpen a Rip Saw.** — A rip saw does its cutting by means of the front part of the tooth. This part of the tooth wears down fastest and it needs most of the filing that is done on the tooth. The back of the tooth should be filed very little, just enough to give the required depth between the teeth. Rip saws are jointed and set the same as cross-cut saws, but the teeth are filed straight across so that they are perfectly square on the front side. In using a rip saw it should be held at an angle of 45 degrees with the wood that is being cut, as shown in Fig. 47.

Digitized by Google

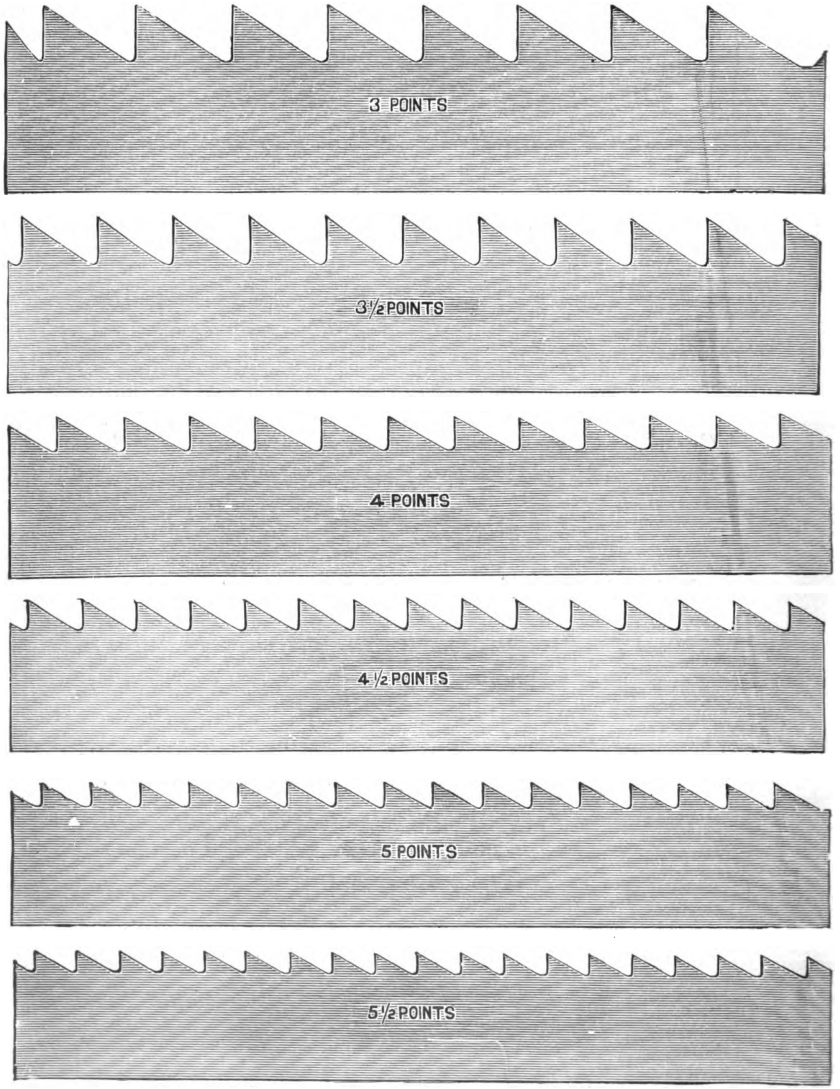

Fig. 46. — Teeth and points per inch of rip saws.

Digitized by Google

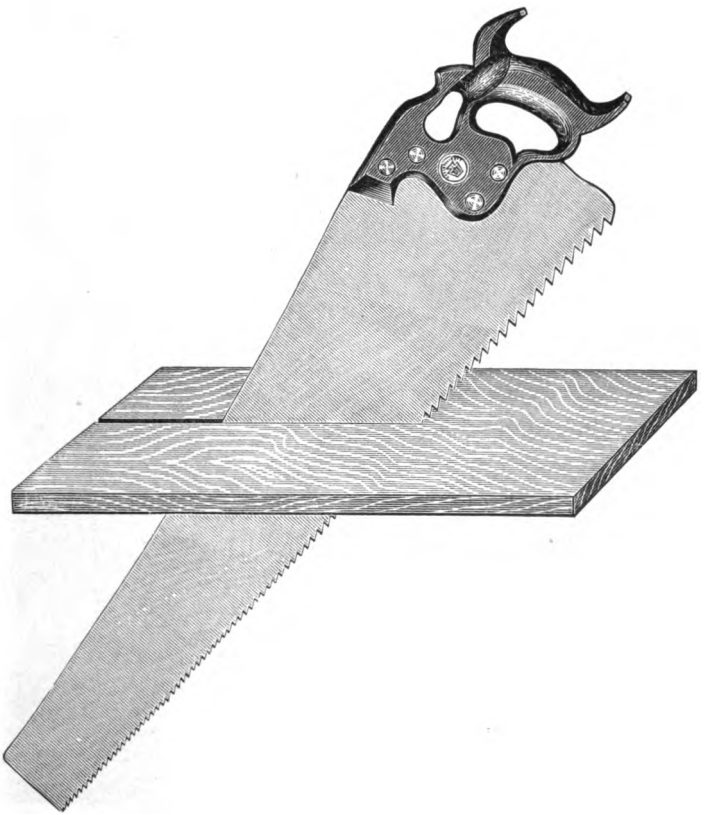

FIG. 47. — Position of rip saw when cutting.

Digitized by Google

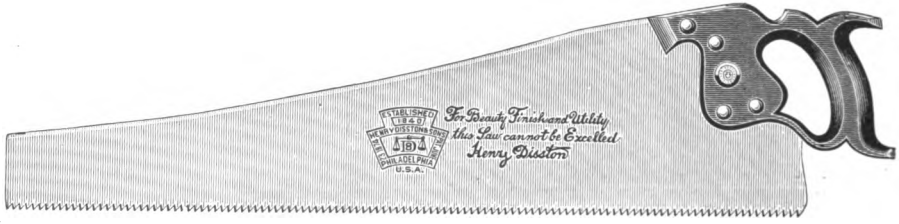

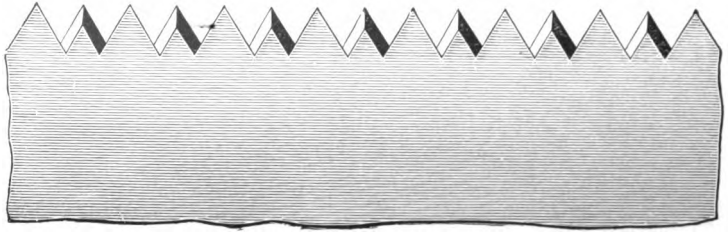

FIG. 48. — Cross-cut saw.

Digitized by Google

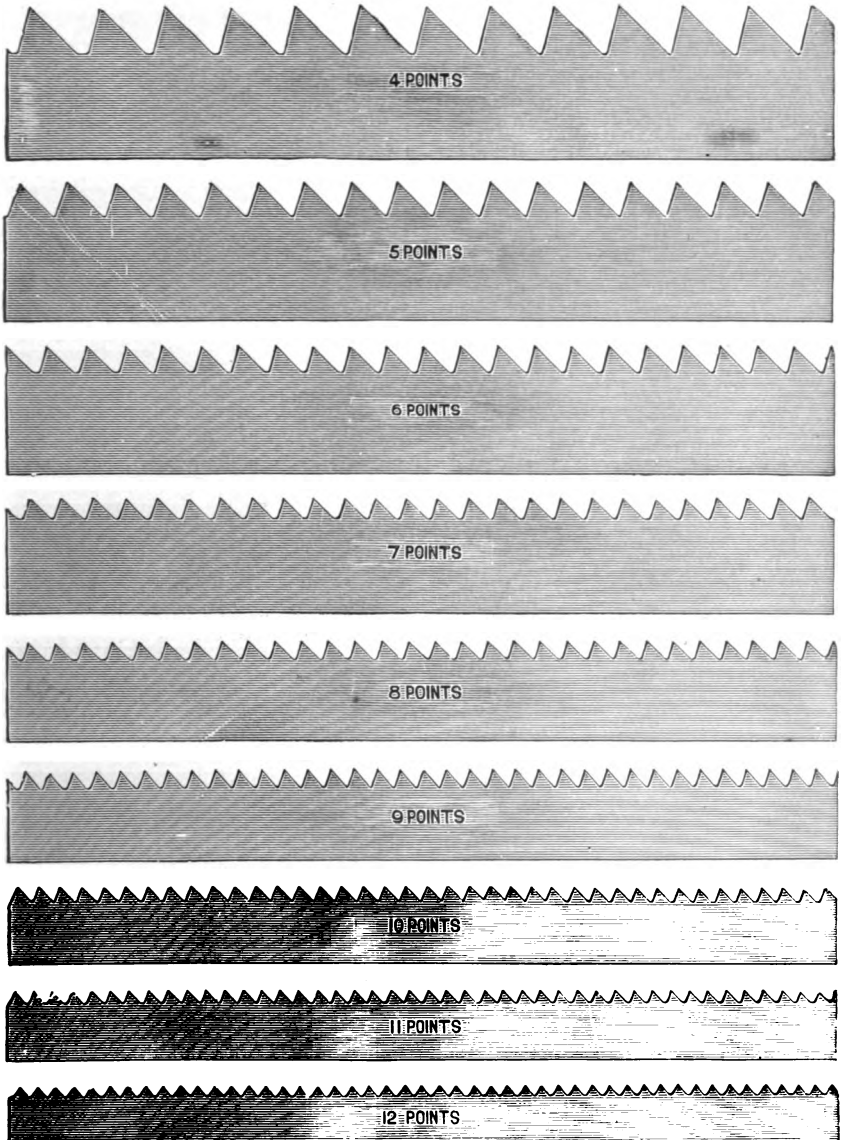

FIG. 49. — Teeth and points per inch of cross-cut saws (full size).

Digitized by Google

33. Cross-cut Saw. — In a cross-cut saw the teeth are V-shaped and are sharpened in such a way that they cut the fibers in passing over them. The finer a saw is made to cut, the greater the number of teeth to the inch. For the number of teeth and points per inch see Fig. 49. For ordinary cross-cutting a 10-point saw (10 points to the inch) should be used, while for ordinary ripping a 7-point rip saw should be used.

34. How to sharpen a Cross-cut Saw. — Place the saw in the saw vise. The first process in putting a saw in

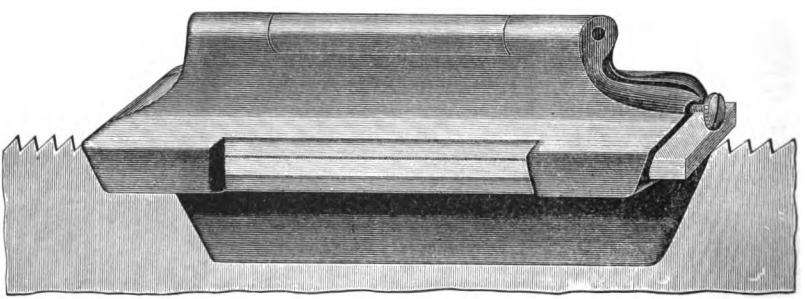

FIG. 50. — Hand-saw jointer.

order is known as *jointing*. To joint a saw take a flat mill file and file the teeth down until they are all the same height. See Fig. 50.

The second operation is the *setting*. This is done by means of a saw set (Fig. 51), which turns the points of the teeth uniformly. The teeth should be set alternately right and left. Great care should be exercised not to break the teeth, for in highly tempered saws the teeth are brittle. Very little set is required in saws for bench work — just enough to make them clear nicely.

Digitized by Google

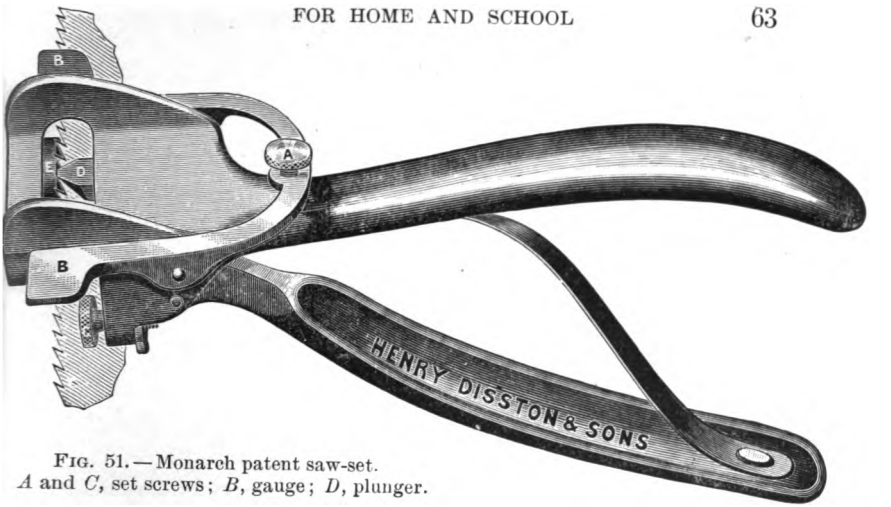

FIG. 51. — Monarch patent saw-set.
A and *C*, set screws; *B*, gauge; *D*, plunger.

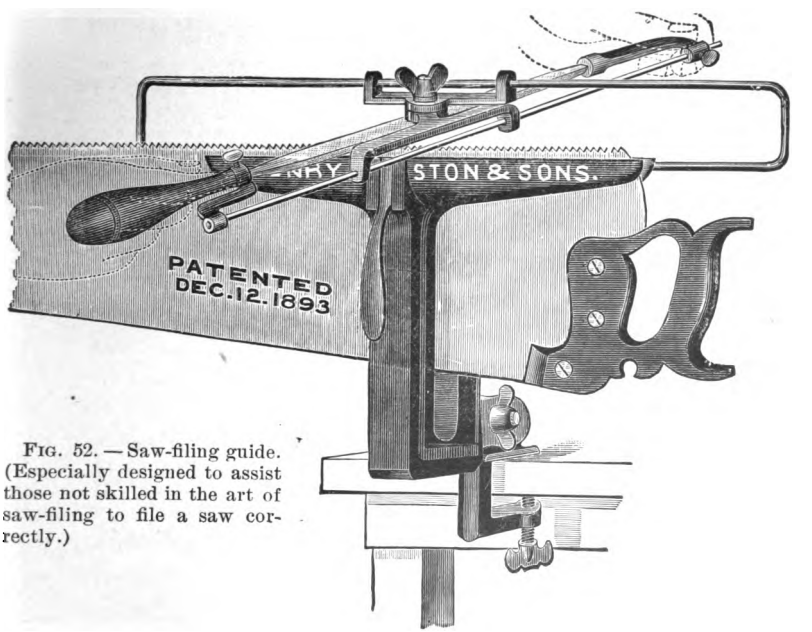

FIG. 52. — Saw-filing guide. (Especially designed to assist those not skilled in the art of saw-filing to file a saw correctly.)

Digitized by Google

After the jointing and setting the saw is ready to be filed. Select good files of proper sizes. Six and seven point saws require a 7-inch slim taper file; eight and nine points, 6-inch slim taper file; and for ten, eleven, and twelve point saws a 5-inch slim taper file is required. Begin to file at the heel and progress towards the tip,

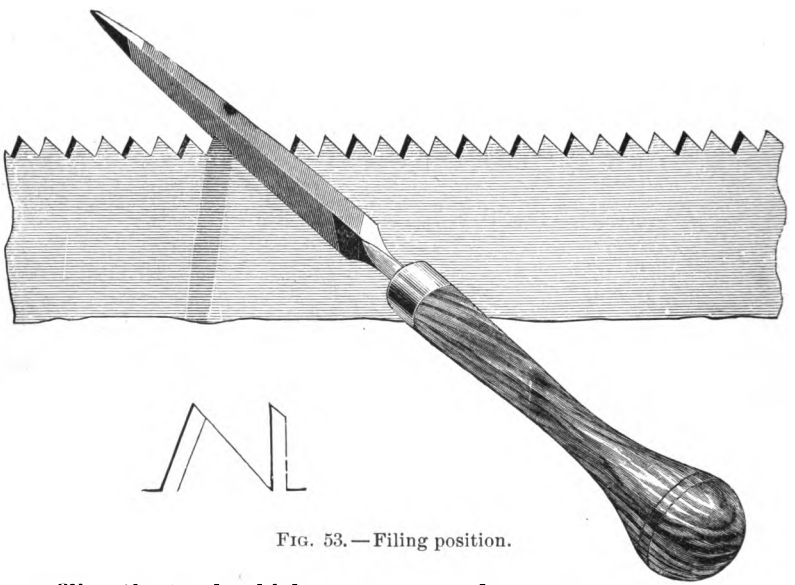

FIG. 53. — Filing position.

filing the teeth which are set away from you.

When the teeth are filed on one side reverse the saw and repeat the process. The teeth are filed at an angle of 45 degrees, as shown in Fig. 53. Sometimes other angles are used, but for general use this is preferred. Fig. 55 shows a saw that has been incorrectly filed. Avoid such errors. Fig. 53 also shows the proper position of the file in filing.

Digitized by Google

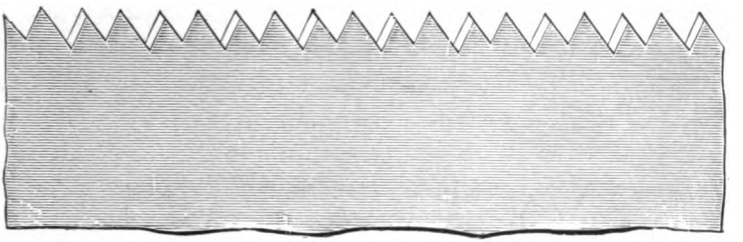

FIG. 54. — Correct filing.

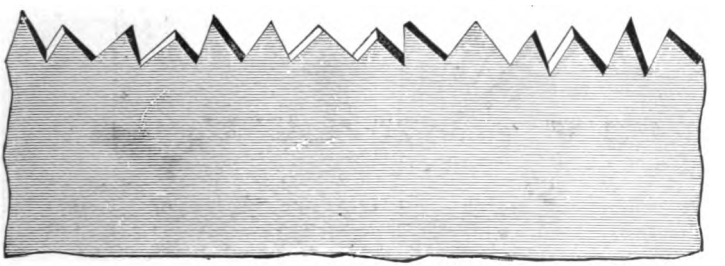

FIG. 55. — Incorrect filing.

Looking down the edge of a saw after it has been filed, the groove should appear as in Fig. 56. If a tooth is out of place, it will be easily detected. A saw in good con-

FIG. 56.

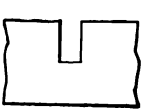

FIG. 57.

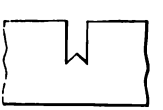

FIG. 58.

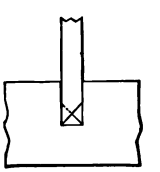

FIG. 59.

dition should leave the bottom of the kerf flat, like Fig. 57, and not like Fig. 58. The cutting action of the teeth is shown in Fig. 59. In making a knife line the blade

Digitized by Google

will cut more smoothly if it is inclined forward a little instead of being held in a perpendicular position, so a cross-cut tooth should incline forward. The slant of the cutting edge of a tooth is called the pitch or rake of the

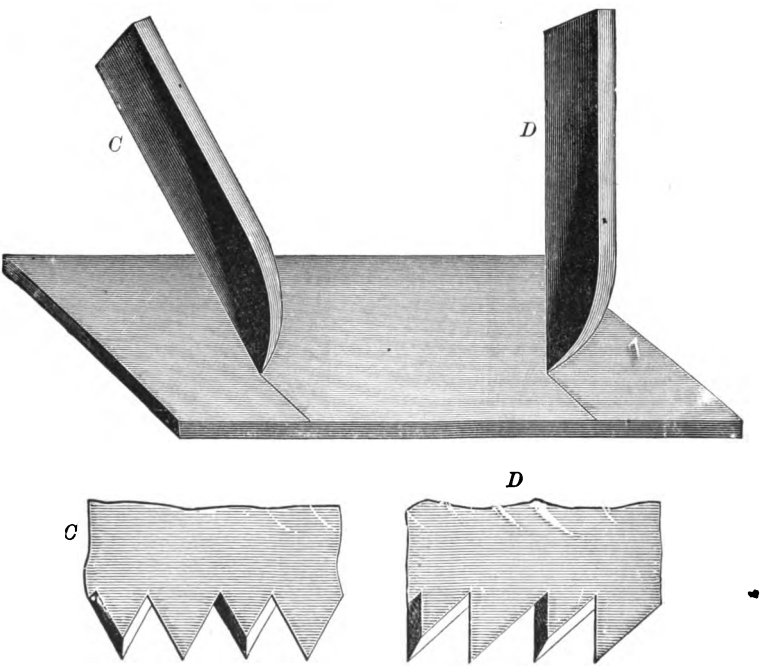

FIG. 60. — Cutting action of saw teeth. *C*, cross-cut saw; *D*, rip saw.

tooth. Fig. 60 illustrates the principle on which saw teeth are constructed.

35. Back Saw. — The back saw is a cross-cut saw with very fine teeth. It is intended for fine and accurate sawing. The saw blade is very thin and this is reënforced

Digitized by Google

by an iron strip extending along the back of the saw. The blade is uniform in width and is from 8 to 14 inches in length.

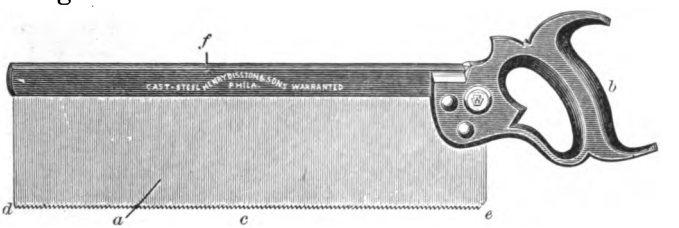

FIG. 61. — Back saw. *a*, blade; *b*, handle; *c*, teeth; *d*, tip; *e*, heel; *f*, back.

36. Bracket Saw. — A bracket saw is a saw constructed in such a way that it can be used in sawing curves in thin woods. It is a very valuable tool in manual training

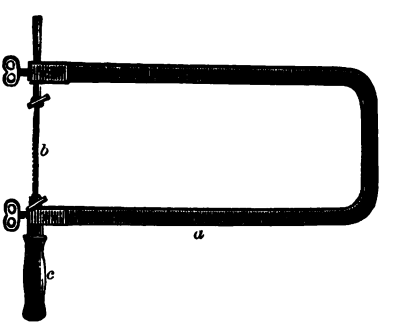

FIG. 62. — Bracket saw. *a*, frame; *b*, blade; *c*, handle.

work, for many of the projects are made up of curved designs. The blades are made in different lengths and sizes from 3 to 5 inches for different thicknesses of wood.

Digitized by Google

37. Hack Saw. — A hack saw is constructed very much like a bracket saw except that it is heavier. It is used in sawing metals. The blades have about fourteen

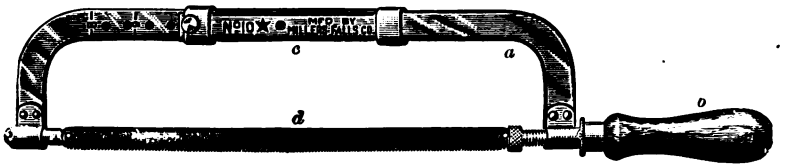

FIG. 63. — Hack saw. *a*, frame; *b*, handle; *c*, adjustable back; *d*, blade.

teeth to the inch and are from 6 to 12 inches in length. The one shown in Fig. 63 is adjustable, taking blades of different lengths.

38. Miter Box. — A miter box is a device for holding wood while it is being sawed at an angle. Such a device is very useful in the making of picture frame joints or miter joints. Fig. 65 shows an improved New Langdon miter box which can be used in cutting any angle from a

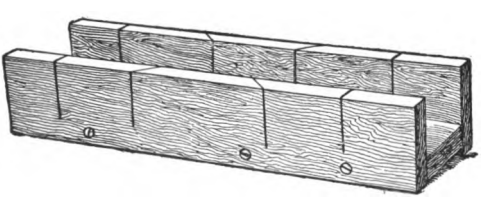

FIG. 64. — Miter box.

right angle to 45 degrees. This box has several adjustments which are valuable. Fig. 64 is a cut of a box that can be made in any shop. It should be made of some hard wood like beech or maple. A cross-cut or a

Digitized by Google

back saw can be used in sawing by letting the saw run in the cuts made in the box. A miter box should never

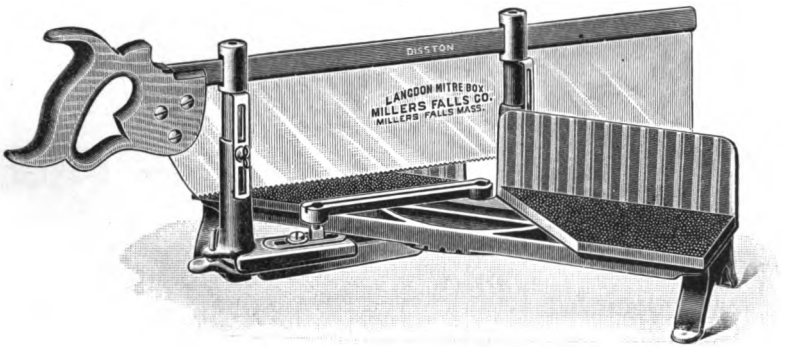

FIG. 65. — Improved new Langdon miter box.

be used in doing work that is intended to develop skill in sawing. Fig. 66 shows a miter planer which is used in planing end wood, or in planing at any angle.

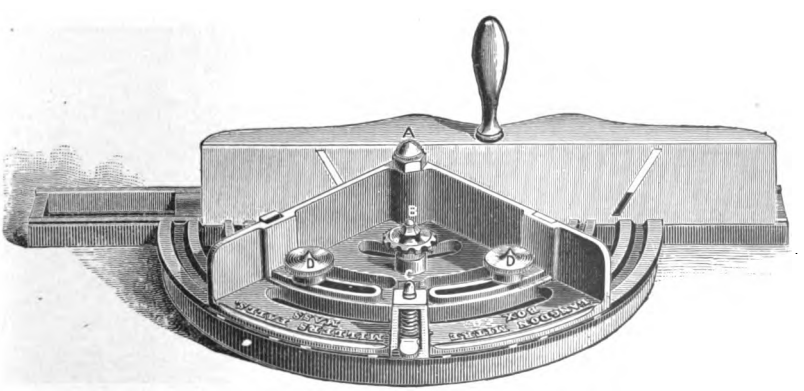

FIG. 66. — Rogers miter planer.

Digitized by Google

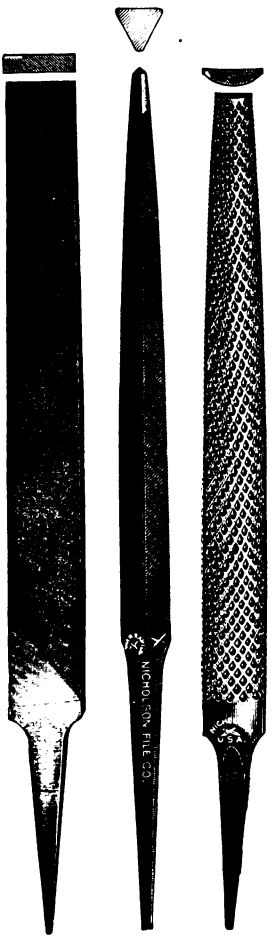

FIG. 67. — Files and rasps. *a*, hand smooth file; *b*, taper saw file; *c*, half-round wood rasp.

39. Files. — A file is an instrument made of steel, having its surfaces covered with sharp-edged furrows or teeth. The furrows are made by straight parallel cuts in the steel. For names and illustrations of cuts see Plate A, Fig. 67. As to the coarse-

WILLIAM T. NICHOLSON, founder of the Nicholson File Company.

ness or fineness of files, they are classified as rough, middle cut, bastard, second cut, smooth, and superfine or dead-smooth. As to the kind and coarseness of cuts and the shapes and sizes of files, many combinations are made, giving a great variety of files. The File Manufacturers' Asso-

Digitized by Google

ciation of the United States quote more than 3000 different files and wood rasps alone. The work to be done must determine the kind of file to use. A new

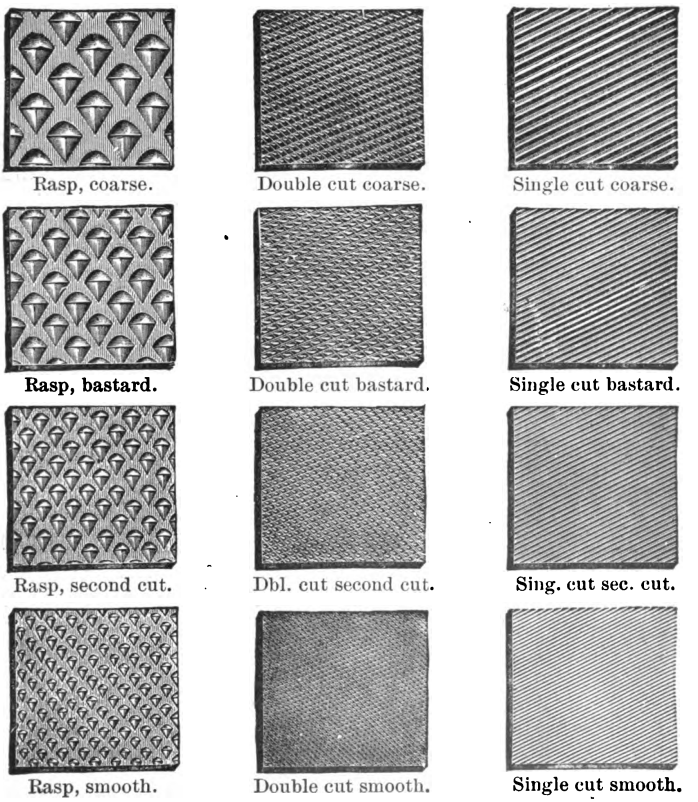

PLATE A, FIG. 67.

file should be used lightly at first, until the thin sharp edges are worn off, after which a heavier pressure may be applied. In filing high-tempered steel the finer grades

Digitized by Google

of files, called second cut, should be used. In using a file a steady stroke with strong pressure is most effective.

40. Wood Rasps. — A wood rasp is a kind of file used in cutting down rough edges of wood. It differs from a file in that the teeth of a rasp are coarse, single teeth, raised from the bar of steel by the pyramidal end of a triangular punch struck obliquely. The wood rasp is a tool whose use should not be encouraged very much in manual training work, and when it is used it should never take the place of an edged tool.

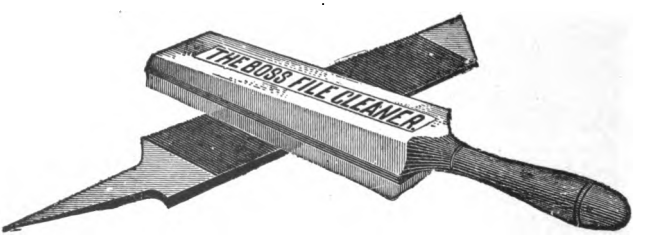

FIG. 68. — File cleaner.

41. File Cleaner. — A file, like every other tool, should be kept clean. For this purpose a file cleaner (Fig. 68) is used. It is a wire brush made of the best grade of fine steel wire.

BORING TOOLS

42. Auger. — An auger is a tool used in boring a hole in wood. Augers are made of the best grade of cast steel properly tempered. The blade is twisted in such a way that a perfect spiral groove is formed by means of which the chips are discharged. There should be at least one set of augers in the shop equipment, con-

Digitized by Google

sisting of one handle and one bit of each of the following sizes: $\frac{1}{2}''$, $\frac{5}{8}''$, $\frac{3}{4}''$, $\frac{7}{8}''$, $1''$, $1\frac{1}{8}''$, $1\frac{1}{4}''$, $1\frac{1}{2}''$, $1\frac{3}{4}''$, and $2''$. For rapid boring a boring machine like the one shown in Fig. 70 is sometimes used. It is used more by the builder than by the bench worker.

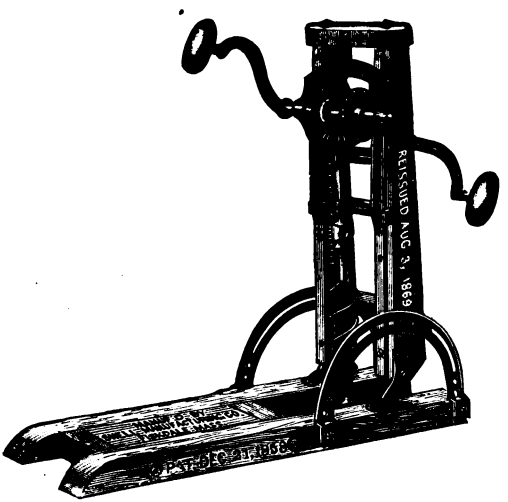

FIG. 70. — Snell boring machine.

FIG. 69. — Auger. *a*, shank; *b*, blade; *c*, tang.

43. Auger Bits. — Auger bits are used for lighter work than the auger. The cutting parts are constructed like the auger, in fact an auger bit is an auger having a tang that will fit a bit brace. One of the best makes of auger bits and perhaps the most extensively used is the Russell Jennings Auger Bit, which was patented by

Digitized by Google

Russell Jennings in 1855. There are, however, many other excellent bits on the market. There are also very many cheap bits on the market at the present time.

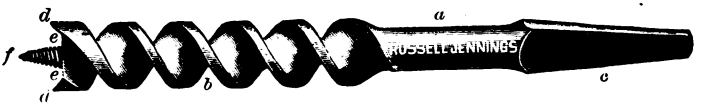

FIG. 71. — Auger bit. *a*, shank; *b*, blade; *c*, tang; *d*, nib; *e*, lips; *f*, spur.

FIG. 74. — Bit-stock drill for wood.

44. Short Auger or Dowel Bits. — These bits are used with great success in working with thin woods. As their name suggests, they were designed to be used in boring holes for dowel pins. For doweling a $\frac{1}{4}''$ bit is used more than

FIG. 72. — Short auger or dowel bit.

any other size, for the standard size of doweling is quarter-inch. Dowel bits are easily centered and are not so liable to break or bend as a longer bit. They range in sixteenths in size from $\frac{3}{16}''$ to $1''$.

FIG. 73. — Brace dowel bit drill.

45. Wood Drills. — For small holes in hard woods the wood drills are very good. They are rapid cutting and when well made are very efficient. They are graded in thirty-seconds and range from $\frac{2}{32}''$ to $1''$ in size.

Digitized by Google

46. Gimlet Bit. — The gimlet bit is used, like the wood drills, in boring very small holes. In using any small bit great care must be exercised not to break the bit.

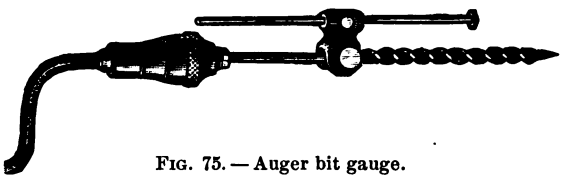

FIG. 75. — Auger bit gauge.

47. Auger Bit Gauge. — The auger bit gauge is a device to be attached to an auger bit to regulate the depth of the hole. It can be used on any bit up to 1″ in size.

48. Countersink. — After a hole has been bored for a screw the countersink is used to rim out the top of the hole to allow the screw head to fit down into the wood

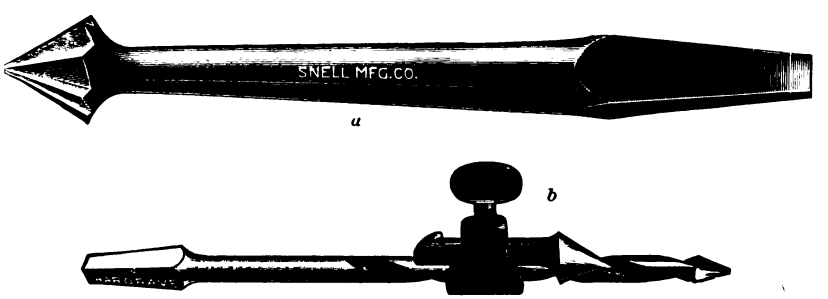

FIG. 76. — Countersinks. *a*, rose countersink; *b*, adjustable countersink.

closely, thereby causing the screw to hold more tightly. Sinking the head of a screw even with the surface or below the surface of the wood is called *countersinking.*

Digitized by Google

49. Brace, or "Bit Brace." — The brace is a tool made to hold an auger bit or other boring tool and is used in driving those tools. It has a steel frame which is either polished or nickel-plated. The head (*b*) is usually ball-bearing that it may turn easily when pressure is brought against it. The wood part of the head and handle is made from some hard wood and is highly polished. The tang of the bit fits into the jaws of the chuck and by tightening the sleeve the bit is held firmly while being

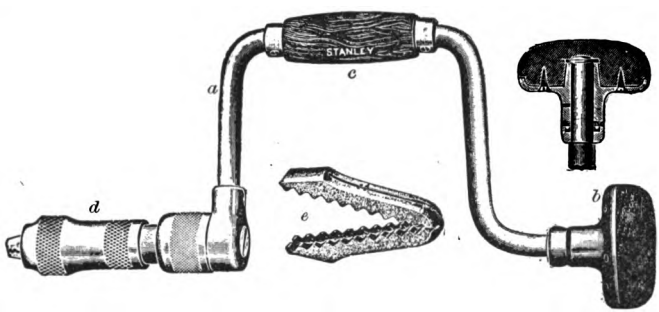

FIG. 77. — Brace. *a*, crank; *b*, head; *c*, handle; *d*, sleeve; *e*, jaws; *d* and *e* (together), chuck.

driven. To insert a bit, grasp the sleeve firmly with the left hand, turn the handle backward until the jaws open enough to receive the tang of the bit, then turn the handle forward until the sleeve draws the jaws tightly together. There are three types of chucks used on braces. They are the "Spofford Style," which has a split socket with a thumb set screw; the "Fray Style," having two revolving sleeves; and the "Barber Style," having two jaws regulated by a sleeve. The Barber brace (Fig. 77) is used more than any other style. The diam-

Digitized by Google

eter of a circle described by the handle (*c*) in making a complete turn is called the *sweep* of the brace. The sweep of braces varies from 4″ to 14″. The larger the sweep the easier the work can be done because of the greater leverage. For boring holes near walls or obstructions where a complete sweep cannot be made, ratchet braces are used. A ratchet brace has a forward and a backward movement. The bit turns with the forward movement of the brace, but remains at rest while the brace is being turned backward.

FIG. 78. — Screw-driver. *a*, blade; *b*, handle; *c*, ferrule.

50. Screw-driver. — A screw-driver is used in driving screws. The blade is usually made of round steel which is forged on the end to fit the head of a screw. The blade is driven firmly into the body of the handle so that it hangs true. The handle is made of hard wood and is usually fluted to enable one to get a good grip with the hand. Screw-drivers range in size, according to the length of the blade, from 2½″ to 18″.

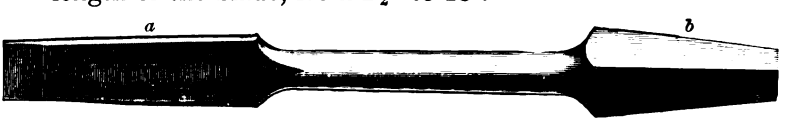

FIG. 79. — Screw-driver bit. *a*, blade; *b*, tang.

51. Screw-driver Bit. — A screw-driver bit is a bit to be used in a brace in driving a screw. It is intended for driving large screws where great pressure and force

Digitized by Google

are required. With this tool screws can be driven more rapidly and with greater ease than with an ordinary screw-driver. Screw-driver bits are made of cast steel and in assorted sizes for different sizes of screws. They are not intended to be used on very small screws.

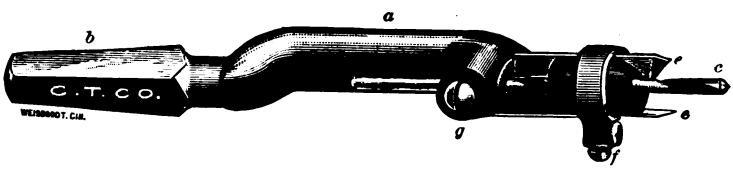

FIG. 80. — Screw and plug bit. *a*, shank; *b*, tang; *c*, drill; *e*, knife; *f*, set screw for knives; *g*, set screw for drill.

52. **Screw and Plug Bit.** — In finishing fine work like the top of an oak table it is sometimes desirable to drive a screw down through the top of the table and then cover the head of the screw. In such a case the screw and plug bit is used to bore a hole for the shank of the screw and at the same time to bore a hole for a wooden plug which will cover the head of the screw. As will be seen in Fig. 80, the knife and drill are adjustable as to the depth of the cuts.

FIG. 81. — Plug cutter. *a*, knife; *b*, collar.

53. **Plug Cutter.** — This is a tool to accompany the screw and plug bit. It is used in cutting a plug across the grain of thin wood to fit a hole made by the plug bit. The plug thus made is coated with glue and driven into the hole to cover the head of the screw. When this work

Digitized by Google

is well done, it is hard to detect a plug in the finished piece. The screw and plug bit and the plug cutter are made in $\frac{1}{2}''$, $\frac{9}{16}''$, and $\frac{5}{8}''$ sizes. In cabinetmaking these tools are very useful.

Clamping or Gripping Tools

54. Hand Screw. — A hand screw is used in clamping glued surfaces together while the glue is setting, or it may be used for clamping pieces together for other purposes. The jaws are usually made of maple, while the spindles are made of second growth hickory. The jaws and spindles are made in different sizes for use in various kinds of clamping.

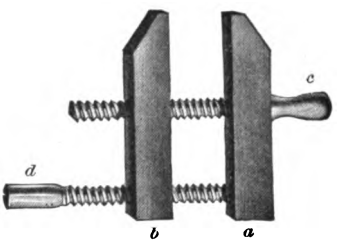

Fig. 82. — Hand screw. *a*, shoulder jaw; *b*, screw jaw; *c*, middle spindle; *d*, end spindle.

55. Screw Clamp. — The screw clamp is intended for clamping small pieces together. It is made of

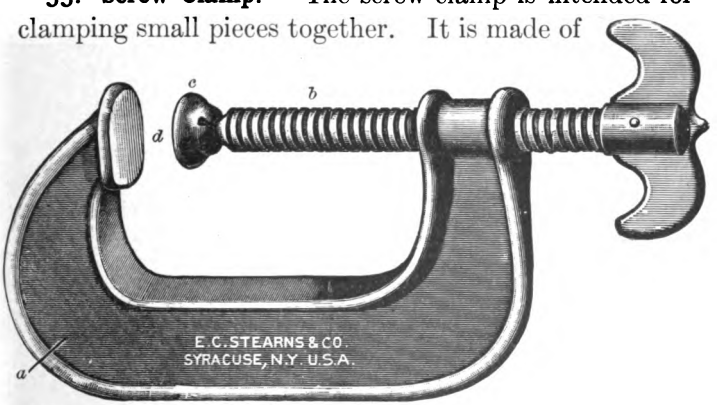

Fig. 83. — Screw clamp. *a*, frame; *b*, screw; *c*, washer; *d*, jaws.

Digitized by Google

malleable iron, except the screw, which is made of wrought iron. The screw clamps range in size from 3″ to 10″.

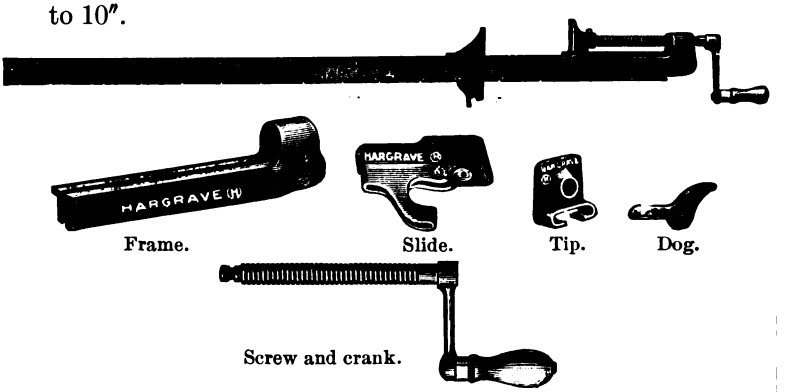

FIG. 84. — Adjustable steel bar clamp.

56. Adjustable Steel Bar Clamp. — The adjustable steel bar clamps are used in clamping wide surfaces together, such as doors, shelves, etc. They are made in different sizes to open from 2½ feet to 10 feet. If at any time a part of the clamp breaks, it can be replaced with a new part.

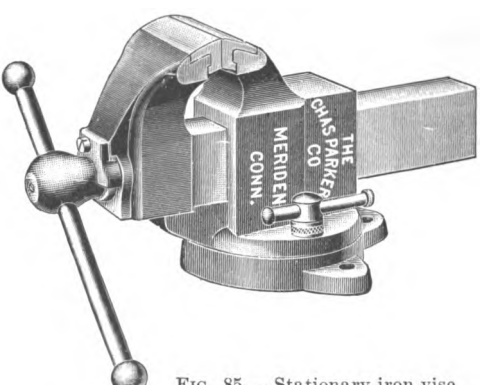

FIG. 85. — Stationary iron vise.

57. Stationary Iron Vise. — This vise is designed for the use of carpenters, cabinetmakers, pattern makers,

Digitized by Google

and woodworkers generally. At least one vise like this, or a similar vise, should be in every shop equipment. Such a vise is useful in filing and in clamping metals.

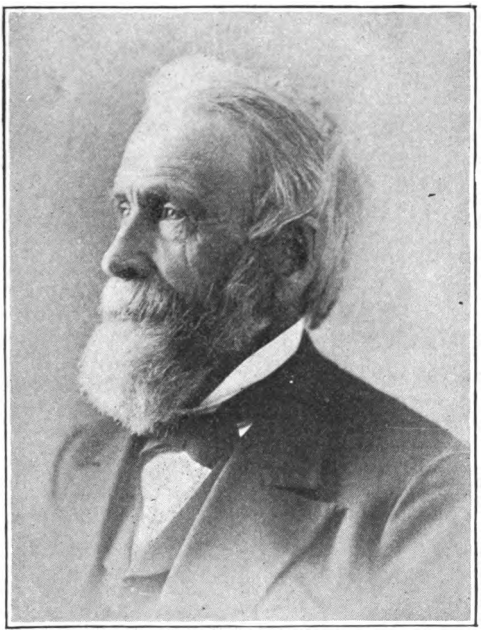

LORING COES, originator of the screw wrench. Born, 1812; died, 1906.

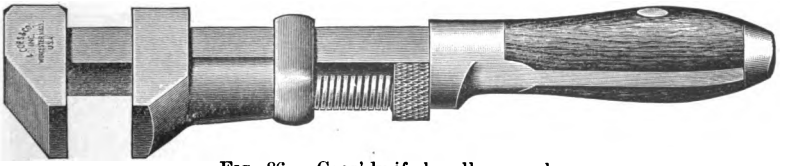

FIG. 86. — Coes' knife-handle wrench.

58. Wrench. — A wrench is used to turn the nuts of bolts and in turning screws, such as lag screws. There

Digitized by Google

are about thirty different styles of wrenches made, and in all more than two hundred sizes.

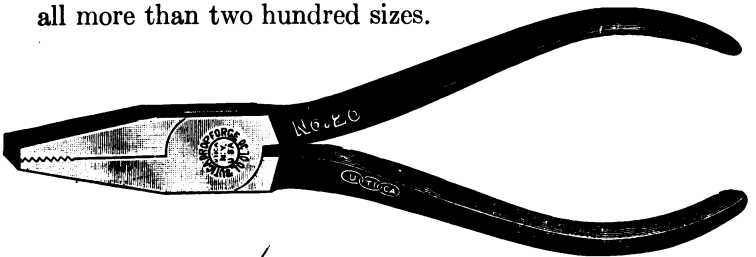

FIG. 87. — Flat nose plier.

FIG. 88. — Round nose plier.

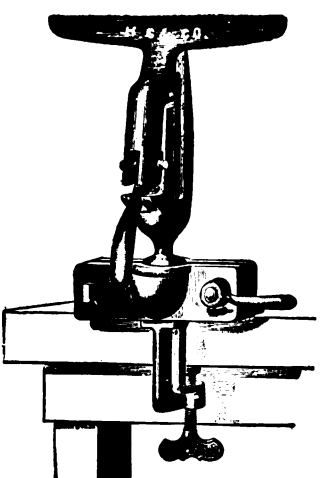

FIG. 89. — Saw vise.

59. Flat Nose Plier. — The flat nose plier is used in bent ironwork, and for various other purposes, such as holding, pulling, twisting, etc.

60. Round Nose Plier. — The round nose plier is used in bent ironwork in making curves and scrolls.

61. Saw Vise. — A saw vise is used in clamping a saw firmly while it is being filed.

Digitized by Google

62. Picture Frame Vise. — This is a very handy tool to have in a shop. By means of this vise a picture frame can be securely clamped while it is being fastened, so that good joints are secured.

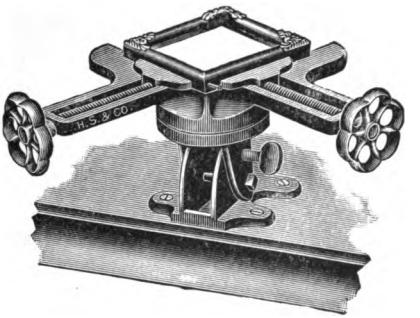

FIG. 90. — Picture frame vise.

POUNDING TOOLS

63. Hammer. — A hammer is a tool used for driving nails, and in pounding metals or other substances. It is one of the most important tools in a bench equipment. The best hammers are made of solid crucible steel with handles made of second growth hickory. They are made in different styles and sizes. A No. 1½ hammer which weighs about one pound

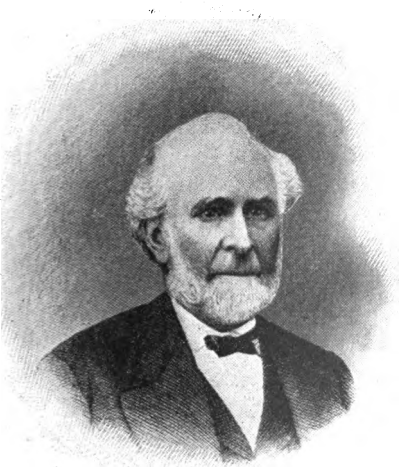

DAVID MAYDOLE, inventor of the adz-eye hammer.

Digitized by Google

is about the right size for all practical purposes. There are many kinds of hammers made, each designed for

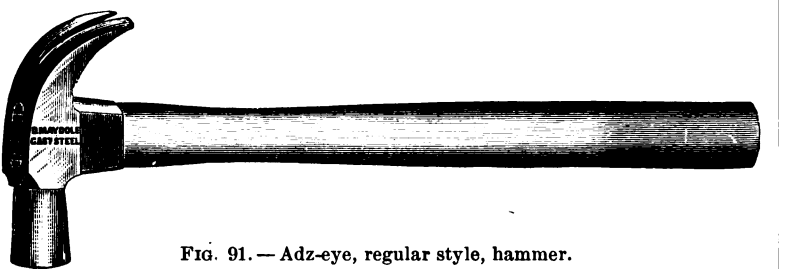

FIG. 91. — Adz-eye, regular style, hammer.

some particular kind of work. Among the different kinds we note the carpenters', farriers', riveting, tin-

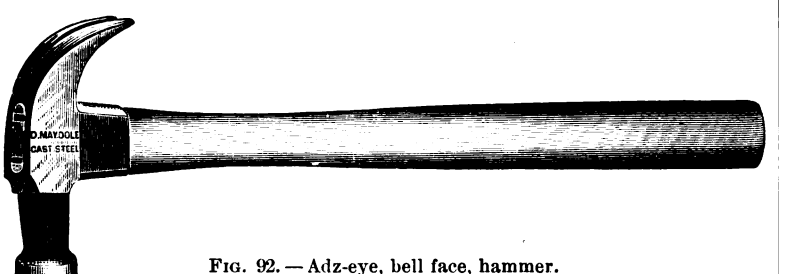

FIG. 92. — Adz-eye, bell face, hammer.

ners', horseshoers', blacksmiths', carriage ironers', engineers', machinists', coopers', prospecting, bricklayers', stonecutters', masons', etc.

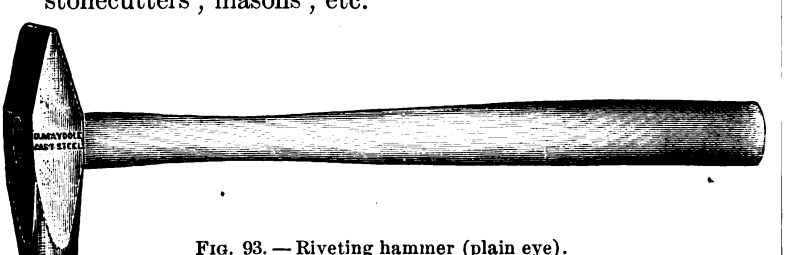

FIG. 93. — Riveting hammer (plain eye).

Digitized by Google

64. Mallet. — A mallet is a tool made of very hard wood, such as lignum-vitæ, with a hickory handle. It is used in driving chisels, gouges, wooden pins, etc. Mallets are made in different sizes and shapes. The style shown in Fig. 94 is very satisfactory.

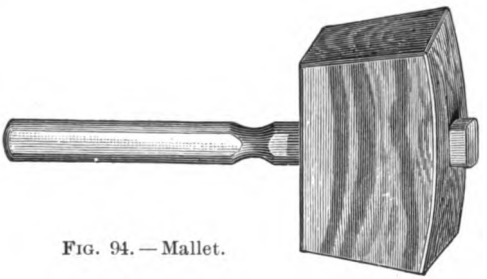

FIG. 94. — Mallet.

FIG. 95. — Trenton anvil.

65. Anvil. — An anvil is a heavy iron block of a particular shape upon which metals are hammered and shaped. At least one anvil should be in every wood-working shop.

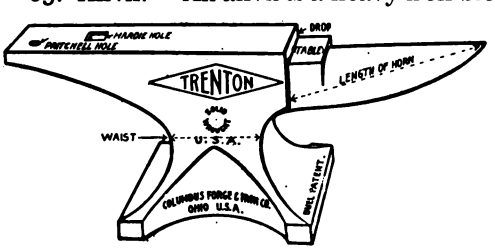

FIG. 96. — Trenton anvil (giving the names of parts).

Digitized by Google

Punching Tools

Fig. 97. — Nail set (knurled body, cup point).

66. Nail Set. — A nail set is a tool used in driving the head of a nail below the surface of wood. By the use of this tool the surface of the wood is not marred by the face of the hammer. Nail sets are made in assorted sizes to fit the heads of different sized nails. They have a knurled body, usually, which helps to give a firm grip. The point is usually cup-shaped.

Fig. 98. — Assorted nail sets.

67. Belt Punch. — A belt punch is a tool used in punching holes through belts for belt lacings or for belt hooks. They are made in two styles — drive belt

Fig. 99. — Drive belt punch.

Digitized by Google

punch, Fig. 99, to be driven with a hammer, and spring belt punch, Fig. 100. Both kinds are made in assorted sizes. The tubes on the spring punches revolve, and these punches are made with either four or six tubes.

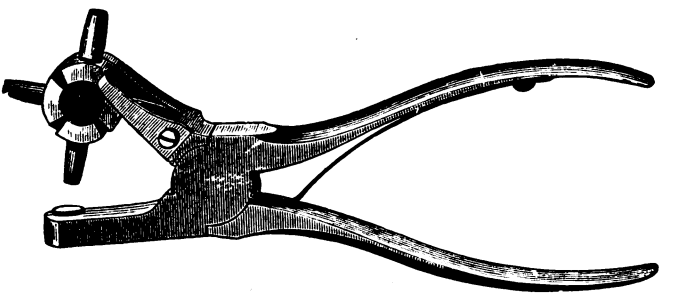

FIG. 100. — Revolving spring belt punch.

68. Carvers' Punch. — This tool is used by wood carvers for groundwork in decorating objects. They are made in assorted sizes and designs.

GRINDING TOOLS

69. Grindstone. — One of the most useful tools about a workshop is the grindstone, which is used in sharpening tools. Perhaps the best grindstones are obtained from the quarries in Ohio. One of the largest grindstone companies in the world, if not the largest, is the Cleveland Stone Company. Grindstones are made in an assortment of sizes and grit. An important factor in the operation of a stone is its speed. The average speed varies from 2500 to 4000 feet per minute. The stone should be kept free from dirty water, grease, or oil.

Digitized by Google

Use clean water and keep the stone true. In grinding small tools the tendency is to hollow the grindstone and thus render it untrue. A Jackson Grindstone Truing

FIG. 101. — **Power grindstone.**

Device, Fig. 102, or some other truing device, should be used frequently to keep the stone true.

70. **Oilstone.** — A tool that is indispensable about a bench is an oilstone. It is needed every little while for putting a keen cutting edge on chisels, planes, and

Digitized by Google

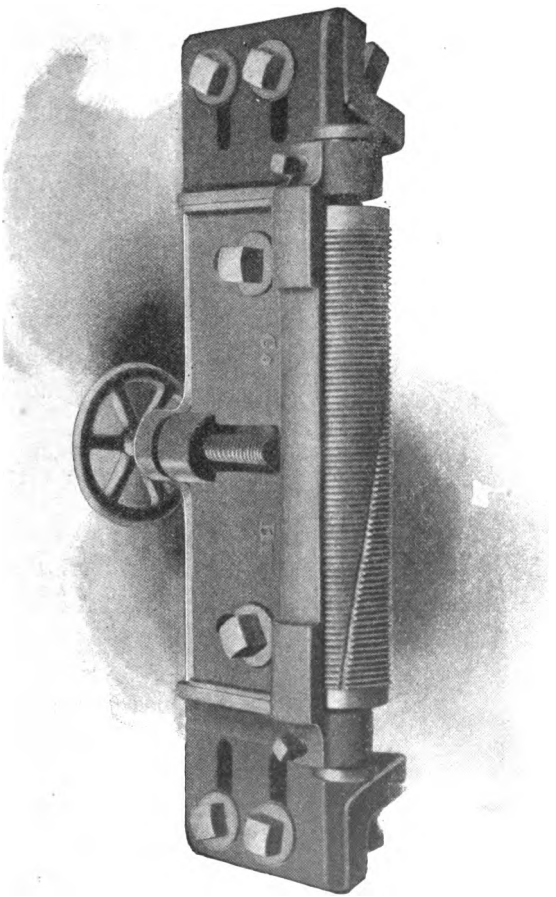

FIG. 102. — Jackson grindstone truing device.

Digitized by Google

knife. A good oil stone is hard to get, for most stones are too hard or too soft, or have other imperfections. Perhaps the most commonly used and the best known of all oilstones are the Washita oilstones. The manufacturers or cutters of these stones make four grades, which are known as 1, "Lily White," and "Rosy Red"; 2, "Extra Washita"; 3, "No. 0 Washita"; and 4, "No. 2 Washita." The "Lily White" and 'Rosy Red" are the best stones, the "No. 2 Washita"

FIG. 103. — Oil stone.

the poorest. The Arkansas oilstones are also quite common. These, however, being of finer grit than the Washita stones, are not so good for woodworking tools, as they cut too slowly. They are used extensively by engravers, surgeons, tool makers, etc., where very keen edges are required. Among the many kinds of stones might be mentioned the Turkey oilstones, the Deerlick, Seneca, Niagara, Chocolate, Lake Superior, Hindostan, and others. Fig. 103 shows an Arkansas stone mounted in a polished cherry box. Fig. 104 shows a Washita

Digitized by Google

slip used in sharpening gouges. Before using an oil stone it should be wiped off with waste and a few drops of oil put on the stone. After using the stone should be wiped off again.

FIG. 104. — Oil slip.

When an oilstone becomes concave or untrue by constant use, it may be made true by using sand paper on it, or by means of a sand wheel. Tack a sheet of sandpaper over a block of wood and rub the stone back and forth over the sandpaper until the surface of the oilstone is true. Use coarse sandpaper at first, then fine sandpaper.

71. **Carborundum Stones.** — Another very important abrasive is carborundum, which is manufactured by The Carborundum Company, Niagara Falls, N.Y. The following characteristics of carborundum are given out by the manufacturers of this remarkable substance:

FIG. 105. — Combination stones (one face coarse, and one face fine, grit).

Hardness. — Diamond is the only material exceeding it in hardness. It cuts emery and corundum with ease.

Brittleness. — Not as tough as the diamond, closely resembling corundum in this respect.

Digitized by Google

Weight. — Its specific gravity is 3.12. It is a little more than one and one fifth the weight of sand. One pound of carborundum is equal in volume to one and one quarter pounds of emery.

FIG. 106. — Pocket stone.

Infusibility. — Infusible in the highest attainable heat. Decomposition occurs in the electric arc.

Insolubility. — It is insoluble in any of the ordinary solvents. Water, oils, and acids have no effect upon it, not even hydrofluoric acid, which readily dissolves sand.

Chemical Composition. — It is composed of carbon and silicon in atomic proportions, and by weight thirty parts carbon to seventy parts silicon. Its formula is SiC.

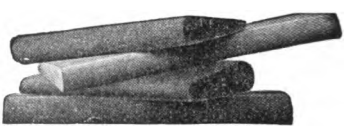

FIG. 107. — Slip stones.

Color. — Pure carborundum is white. In its commercial manufacture the crystals are produced in many colors and shades, partially as the result of impurities, and partly owing to surface oxidation. The prevailing colors are green, black, and blue. The color has no effect upon its hardness.

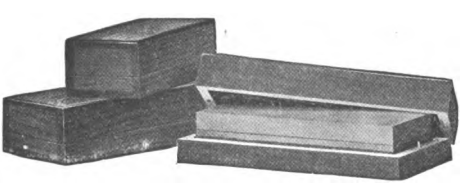

FIG. 108. — Carborundum stones.

72. How to sharpen Edge Tools. — In sharpening edge tools, such as chisels, plane bits, sloyd knife, etc., certain principles must be observed. *The correct shape*

Digitized by Google

of the tool must be preserved in the sharpening process, and at the same time *a keen cutting edge must be secured.*

The first process of sharpening is called *grinding.* This is done by means of a grindstone set in motion. If a chisel or a plane bit is to be ground, it should be held as shown in Fig. 109. The angle at which the tool is ground is determined by the kind of material to be cut. If it is to be used on soft wood, the tool should be held at an angle of about 20 degrees with the stone, and for hard wood it should be held at about 30 degrees with the stone. The grindstone should turn as shown by the arrow in the cut. Avoid rounding the bevel in grinding. Keep the bevel straight. A sloyd knife and turning chisels are ground as shown in Fig. 110, with a straight bevel on each side of the cutting edge. Ordinary chisels and plane bits have a bevel only on one side, as shown in Fig. 111.

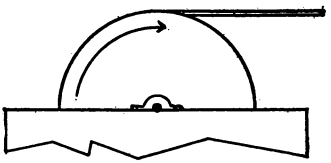

FIG. 109. — Showing position of chisel on grindstone.

FIG. 110. — Blade of sloyd knife (showing correct grinding).

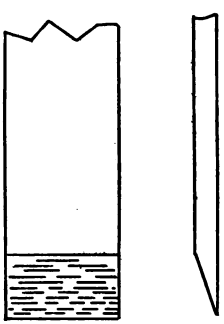

FIG. 111. — Chisel (showing correct grinding.)

After the tool has been ground it should be sharpened on the oilstone, as shown in Fig. 112. The tool is shoved back and forth as indicated by the arrows until a delicate

Digitized by Google

wire edge is turned up on the straight edge. The straight edge is then held flat on the stone and shoved back and forth a few strokes. These two processes are repeated until the wire edge disappears and a keen cutting edge is produced. A few strokes made across the palm of the hand will also help to remove the wire edge. Test the cutting edge to see if it is sharp by drawing the thumb very lightly across the cutting edge.

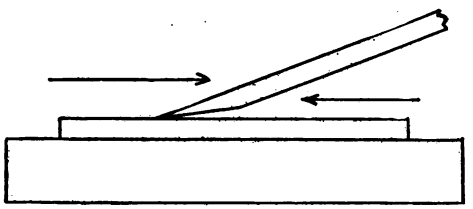

FIG. 112. — Showing position of chisel on oilstone.

Gouges and other edged tools are sharpened in a similar way.

EXTRA TOOLS

73. Cabinet Scraper. — The cabinet scraper is an oblong piece of polished saw steel and is used in scraping hard woods. Cabinet scrapers are made in assorted sizes. The 3″ times 5″ size is a good size for bench work. They are sharpened with a file in such a way that a fine wire edge is turned, and it is this wire edge that really does the cutting or scraping. As soon as this is worn off the scraper should be filed again. With the improved block planes which we now have there is little use for cabinet scrapers.

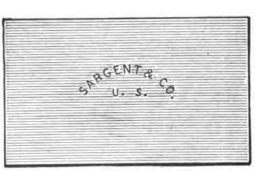

FIG. 113. — Cabinet scraper.

Digitized by Google

74. Oiler. — The oiler is used about the bench to hold oil that is used frequently on the oilstone and for other purposes. A copperized can like the one shown in Fig. 114 is a good can for use about a bench. Oilers are made in assorted sizes and in different shapes and styles.

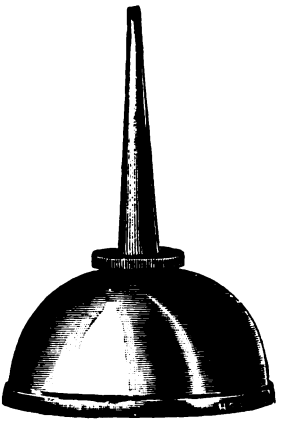

FIG. 114. — Oiler.

75. Bench Brush. — This is a brush used in dusting the tools and bench. It should be used very carefully at the close of each exercise. Remember that the bench and tools are to be left clean when you finish your work each day.

FIG. 115. — Bench brush.

76. Handles. — Frequently handles are broken and should be replaced by new ones. An assorted stock of

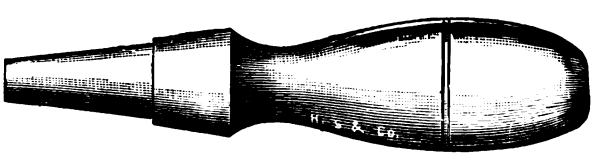

FIG. 116. — Socket chisel handle.

these handles should be kept on hand, or where practicable they should be made by the students.

Digitized by Google

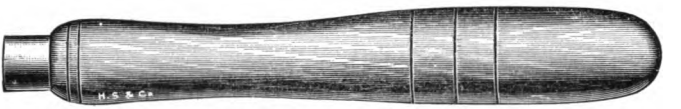

FIG. 117. — Turning handle.

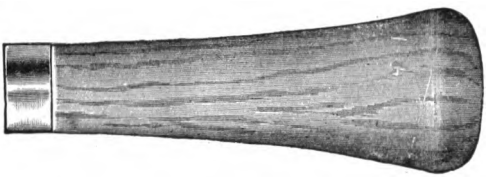

FIG. 118. — Carving tool handle.

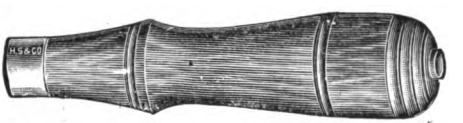

FIG. 119. — Tanged chisel handle.

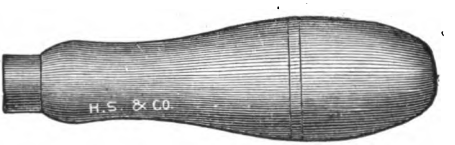

FIG. 120. — File handle.

FIG. 121. — Adz-eye hammer handle.

77. Steel Letters and Figures. — These are used in lettering and numbering finished work, or they may be used for other purposes. Each letter is held in position and then struck with a hammer, making an indentation in the wood. A more perfect letter can be made on end wood than on parallel fibers. They are made in assorted sizes from $\frac{1}{32}$ of an inch to $\frac{1}{2}''$.

Digitized by Google

78. Trimmer. — A trimmer is a tool used in trimming end wood either squarely across the fibers, or at an angle. They are made so the cut can be adjusted at any angle from 30 to 150 degrees. There are many styles and makes of trimmers on the market at the present time.

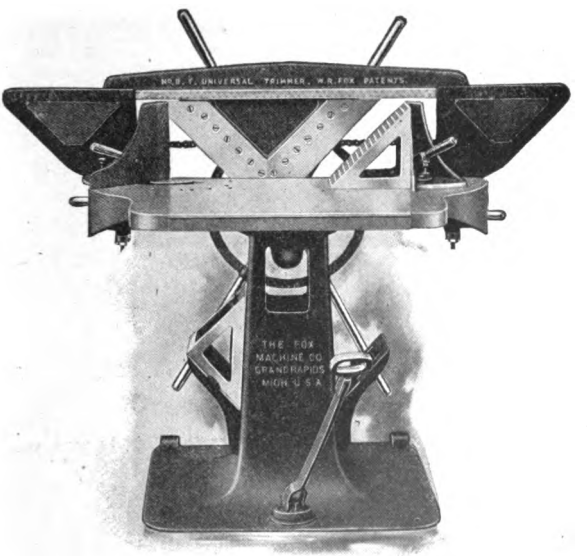

FIG. 122 *a*. — Wood trimmer.

One of the best made is the Fox, shown in Fig. 122 *a*. It is built upon the mechanical principle of a shearing cut, the knife shearing against the point of a gauge which is made to swing about a pivot in the arc of a circle. The gauge and knife are the most vital parts of the trimmer and should be kept in perfect order. Make thin cuts and keep the knife sharp.

Digitized by Google

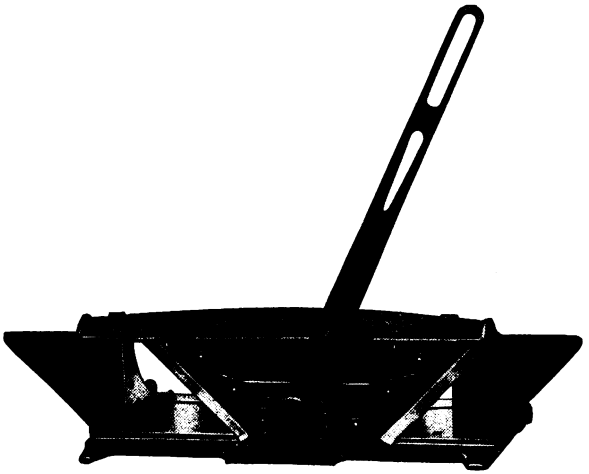

FIG. 122 *b*. — Wood trimmers.

Digitized by Google

PART II

Woodworking Machines

79. Work. — The overcoming of resistance of any kind through space is called work. It implies a change of position. The fundamental formula for work, therefore, is

$$W(\text{Work}) = F(\text{Force}) \times s(\text{Space}).$$

80. Energy. — The capacity of a body for doing work is called energy. It is measured by the amount of work that can be done by that body. The unit of work is also the unit of energy. Energy is manifested in many forms, but in our work on machines we refer to mechanical energy.

81. Power. — The rate at which any agent, such as steam, electricity, animal force, etc., does or has the capacity to do work is called power, and is measured by the amount of work that it does or has the capacity to do in a given unit of time. The formula by which power is determined is represented thus: —

$$P(\text{Power}) = \frac{w(\text{Work})}{t(\text{Time})}.$$

The unit in which power is estimated is called horse power. A horse power (H.P.) is the power to do 33,000 foot pounds of work per minute, or 550 foot pounds per second of time, — *i.e.* the power equivalent to raising 33,000 pounds 1 foot in 1 minute against the force of

Digitized by Google

gravity. It was established by James Watt, the inventor of the steam engine, who considered that a horse could do this amount of work per minute and introduced this term as the unit of measure. It is probable, however, that the average horse has not that amount of power.

In manual training work steam, gas, or electric power is used to run the woodworking machines. Electricity is preferred on account of its quiet, ease of manipulation, economy of space, and cleanliness. Gas is used extensively, but is not as desirable as electric power. Many manual training plants are also furnished with steam power.

A manual training shop should be equipped with the following power machines: 1 band saw (2 to 3 H.P.) 1 scroll saw (2 H.P.), 1 swing saw (1 to 2 H.P.), 1 combination saw bench (2 to 4 H.P.), 1 single surfacer (4 H.P.), 1 jointer (2 H.P.), 1 grindstone ($\frac{1}{2}$ H.P.), 20 10″ swing wood turning lathes, and 1 pattern makers' lathe (2 H.P.). For running this amount of machinery the writer would recommend two lines of shafting, one for the lathes and one for the other machines. Let the lathe shaft be driven by a 16 H.P. electric motor and the shaft which runs the other machines by an 18 H.P. motor.

Many schools are now equipped with an electric light and power plant. A combined engine and dynamo, like Fig. 123, is desirable for this work. To furnish power sufficient to run 1000 16-candle-power lights, 2 arc lights for the stereopticon lanterns, 1 16-H.P. motor for the lathes, and 1 18-H.P. motor for the other machines,

Digitized by Google

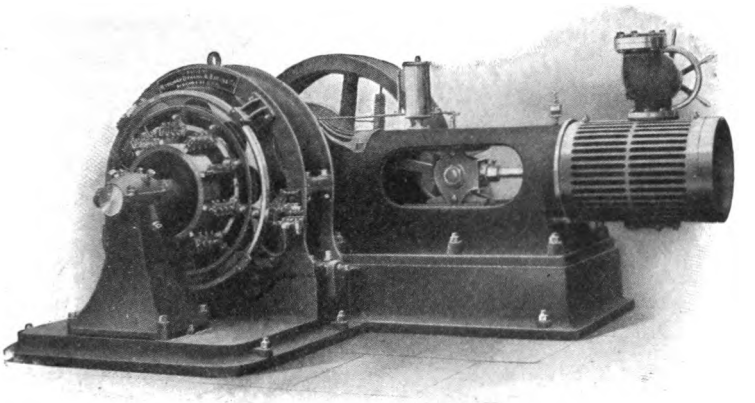

FIG. 123. — Engine and dynamo.

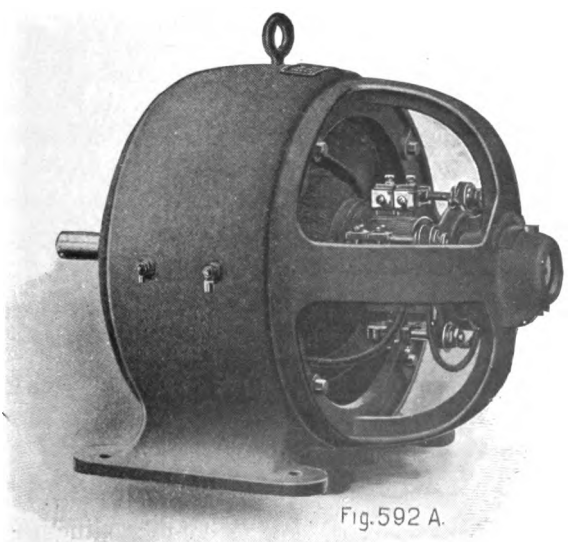

FIG. 124. — Electric motor.

Digitized by Google

would require a 200-H.P. engine and a 125-kilowatt generator. This estimate is based upon the assumption that the generating set should be large enough to furnish all of the power at one time, but it would seldom be necessary to use all of the power at one time, so that possibly a 100 kilowatts generator would develop sufficient power. To furnish sufficient power to operate the light and power plant indicated above, The Ridgway Dynamo and Engine Company, Ridgway, Pa., recommend a McEwen simple direct connected engine and a Thompson-Ryan direct connected generator with the following specifications:—

Specification for Engine

The engine to be capable of developing 200 indicated horse power when cutting off at ¼ stroke, with an initial steam pressure of 90 pounds in the steam chest.

Diameter of cylinder	17 inches.
Stroke	16 inches.
Speed	250 revolutions per min.
Diameter of governor wheel	66 inches.
Face of governor wheel	14½ inches.
Diameter of steam pipe	6 inches.
Diameter of exhaust pipe	7 inches.
Length of engine over all	12 feet.
Width of engine over all, including generator and outboard bearing	10 feet.

Shipping weight of engine complete, including subbase, outboard bearing, and extended shaft, 21,200 pounds.

Digitized by Google

Specification for Generator

The generator to have a rated capacity of 125 kilowatts when running at its normal speed.

Voltage at no load	250 volts.
Voltage at full load	250 volts.
Current at full load	500 amperes.
Speed	250 revolutions per min.
Diameter of armature	30 inches.
Length of armature	35 inches.
Width of generator	5 feet.
Number of poles	10.
Number of carbon brushes	30.
Shipping weight of generator	9200 pounds.
Current density in armature	900 cir. mils per ampere.
Current density in field coil	1200 cir. mils per ampere.
Current density in brushes	3 amperes per sq. in.

The generator will run at the above rated capacity for 24 hours, with a rise in temperature not exceeding 75° F. above the surrounding atmosphere.

The commercial efficiency (the ratio of the energy delivered by the generator to that applied to it), under the conditions of speed and load given below, should not be less than the following:—

Speed 250 revolutions per minute.
Load 62½ K.W. Efficiency, 90.3%.
Load 93¾ K.W. Efficiency, 91.5%.
Load 125 K.W. Efficiency, 92%.

The generator is able to deliver 25% more than its full rated load for two hours, and 75% more than its full rated load momentarily, without injuriously heating or

Digitized by Google

sparking and without requiring a change in the position of the brushes.

Other large manufacturers make similar recommendations. If it is not advisable to put in a power plant, power can be secured from the local plant to operate motors in the manual training shop.

82. Band Saw. — A band saw is a power saw that can be used for a wide range of sawing. It cuts rapidly and accurately, and is simple in construction. Band saws are made in the following sizes: 30″ (diameter of wheels over which the band saw travels), 34″, 36″, 38″, 40″, and 42″. A band saw, like every other tool or machine, needs to be properly adjusted to do a given piece of work, and it should receive proper care and attention at all times to be the most efficient. There is considerable stretch, which is called *surplus elasticity*, to a new band saw and on this account the saw should receive very careful use at first. The speed for the tight and loose pulleys should not be more than 400 revolutions per minute. The tension of the saw must be perfect and uniform, and the saw should run without vibrating.

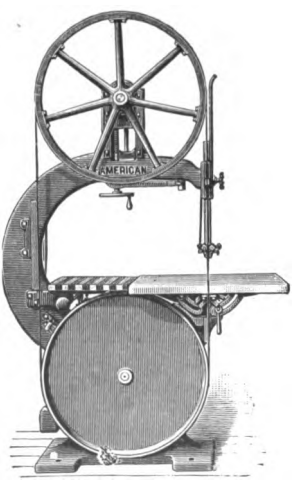

FIG. 125. — Band saw.

83. Scroll Saw. — This saw is intended for sawing both inside and outside curves. It should have a

Digitized by Google

tilting table so that curves can be sawed at an angle if it is desired. This saw, like the band saw, must have the proper tension. The driving pulley ($8\frac{1}{2}'' \times 3''$) should make about 800 revolutions per minute to give the proper speed. The saw blades are made in different sizes. A $\frac{1}{4}''$, 16″ long, is a good size for ordinary work.

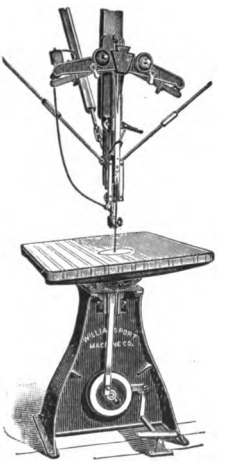

Fig. 126. — Scroll saw.

84. Swing Saw. — This saw is used in cross cutting lumber. It is especially adapted for use in getting stock ready for class use, or where lumber is to be cut into equal lengths. Swing saws are usually hung to the ceiling, although they may be made to swing from the wall or from under the table. The construction of the swing saw is shown in Fig. 127. They are made

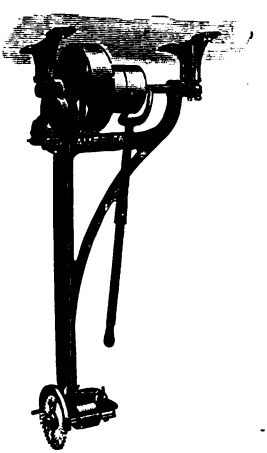

Fig. 127. — Swing saw and table.

Digitized by Google

in different lengths, but the regular length is 7 feet 2 inches from the base of the hangers to the centre of the arbor. They are made to swing either right or left handed. The regular size of the saw used is 14″ in diameter. The speed of the tight and loose pulleys (10″ by 5″) should be 400 revolutions per minute.

85. Combination Saw Bench. — The combination saw bench is a practical, all-round machine, and to be most efficient should embody all the conveniences and attachments required for general work to accurate lines. It can be used for ripping, cross-cutting, and grooving or dadoing. The best saw tables are provided with three gauges, — one slitting gauge, arranged to tilt to 45 degrees or less for bevel sawing, one adjustable, and one stationary cut-off gauge. The countershaft is placed on the floor about five feet from the centre of the arbor, thus leaving the top of the table free from belting. The speed of the tight and loose pulley (12″ × 6¼″) on the countershaft should make 600 revolutions per minute. Patent groovers or dado heads as shown in Fig. 129 are used when grooving is to be done. These groovers will cut a perfect groove with or across the grain, if they are in perfect condition.

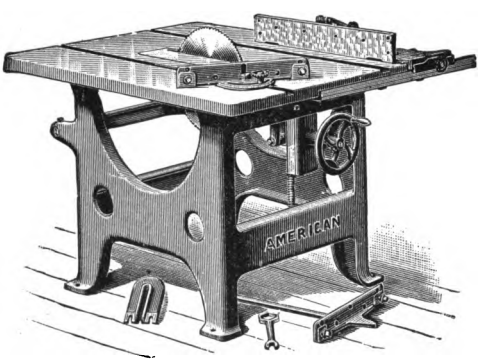

FIG. 128. — Saw bench.

Digitized by Google

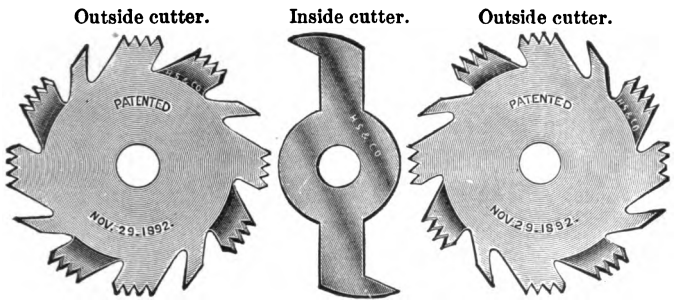

FIG. 129. — Patent groover or dado heads.

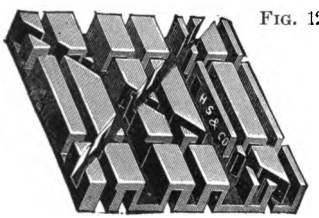

Sample of work made with groover head.

They are dangerous to use and one must handle them with great care.

86. Saw Guard. — There is danger in operating a rip saw, or in using any power saw for that matter, and one cannot be too careful in using every precaution against accidents. The saw guard shown in Fig. 130 may help to prevent accidents. It prevents pieces of wood from flying back and keeps sawdust from flying into the operator's face, enabling him to see his work. This guard should be used by all means in a manual training shop, where unskilled people use the saw.

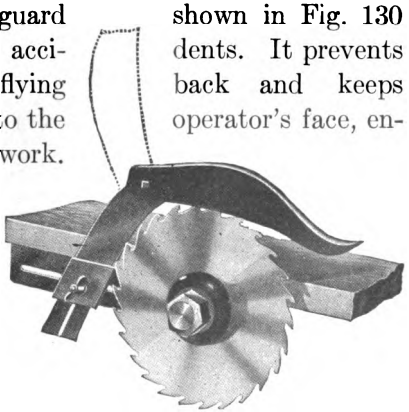

FIG. 130. — Saw guard.

87. Circular Saws. — A circular rip saw and a circular cross-

Digitized by Google

cut saw work on the same principle as ordinary rip and cross-cut saws work, and they are sharpened practically the same. The mandrel (sometimes called arbor) of a circular saw is the spindle to which the saw is fastened, and is run by means of a pulley which is connected with the driving pulley. The mandrel should be kept level and should be kept well oiled. Do not screw the saw too tightly on the mandrel, for it may heat and cause the saw to bind, or buckle. The saw should fit the mandrel perfectly true, when in place, so that every tooth will cut. If the saw heats too much at the center, it needs more set. If it heats at the rim, the backs of the teeth may be too high, or the saw may not run true. As a rule thick saws are more successful than thin saws, for it requires more than ordinary skill to successfully operate a thin saw. The greater the speed, the thicker the saw should be. The following table may be helpful in selecting circular saws:—

Diameter	English Gauge	Size of Hole
3″	21	$\frac{1}{2}$″
4″	19	$\frac{3}{4}$″
5″	19	$\frac{3}{4}$″
6″	18	$\frac{3}{4}$″
7″	18	$\frac{3}{4}$″
8″	18	$\frac{7}{8}$″
9″	17	$\frac{7}{8}$″
10″	16	1″
11″	16	1″
12″	15	$1\frac{1}{8}$″
14″	15	$1\frac{1}{8}$″
16″	14	$1\frac{1}{8}$″
18″	13	$1\frac{1}{4}$″

Digitized by Google

A saw is right-handed when it turns towards you as you stand in front of it, the gauge being on the left-hand side of the saw. If the gauge is on the right hand of the saw, it is a left-handed saw. The most efficient saw is one that cuts the fastest and smoothest with the least expenditure of power.

88. The Speed of Circular Saws. — As a rule the rim of a circular saw should travel about 9000 feet (nearly two miles) per minute. Saws differ in diameter, and in order to get the correct speed different revolutions must be made, a small saw making a greater number of revolutions per minute than a larger saw. A saw 12″ in diameter is about 3 feet in circumference and must make 3000 revolutions per minute in order to have the correct speed. If the speed of a saw is too high, the saw will not cut well, for it will heat and buckle and will not run true. It is also very dangerous. On the other hand, saws run at too low a speed will not work well. The following table gives the speed at which circular saws should be run: —

Table of Speed of Circular Saws

Size or Diameter of Saw	Rev. per Min.	Size or Diameter of Saw	Rev. per Min.	Size or Diameter of Saw	Rev. per Min.	Size or Diameter of Saw	Rev. per Min.
Inches	Speed	Inches	Speed	Inches	Speed	Inches	Speed
8	4,500	26	1,384	42	870	58	625
10	3,600	28	1,285	44	840	60	600
12	3,000	30	1,200	46	800	62	575
14	2,585	32	1,120	48	750	64	550
16	2,222	34	1,050	50	725	66	545
18	2,000	36	1,000	52	700	68	529
20	1,800	38	950	54	675	70	514
22	1,636	40	900	56	650	72	500
24	1,500						

Digitized by Google

89. Rules for Calculating the Speed of Saws, Pulleys, and Drums. —

PROBLEM 1. The diameter of the driven being given, to find its number of revolutions.

Rule. — Multiply the diameter of the driver by its number of revolutions, and divide the product by the diameter of the driven; the quotient will be the number of revolutions of the driven.

PROBLEM 2. The diameter and revolutions of the driver being given, to find the diameter of the driven, that shall make any given number of revolutions in the same time.

Rule. — Multiply the diameter of the driver by its number of revolutions, and divide the product by the number of revolutions of the driven; the quotient will be its diameter.

PROBLEM 3. To ascertain the size of the driver.

Rule. — Multiply the diameter of the driven by the number of revolutions you wish it to make and divide the product by the revolutions of the driver; the quotient will be the size of the driver.

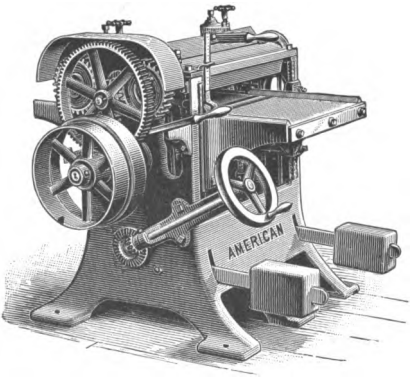

FIG. 131. — Single surfacer.

90. Single Surfacer. — This machine is not absolutely necessary in a manual training shop, yet it is very useful. It is built

Digitized by Google

with special reference to doing smooth work on wood, from $\frac{1}{16}''$ to 6″ in thickness. Surfacers are made in 16″, 20″, and 24″ widths. The tight and loose pulleys (10″ by $5\frac{1}{4}''$) on the countershaft should make 800 revolutions per minute. A machine like this should never take the place of work that should be done by hand, yet very often it is most practicable to have the benefits of such a machine. With it old stock can be worked up and used, thus saving much in the expense account.

91. **Jointer.** — The jointer is a machine used, as its name implies, in squaring, smoothing, and taking the wind out of timber, glue-jointing, beveling, chamfering, rabbeting, molding, tonguing and grooving, beading, cornering, cross graining, tenoning, etc. It has attachments and adjustments for all of these kinds of work, thus making it a very valuable machine in a manual training equipment. Jointers are made in different sizes. A 12″ cut is about the right size for this work. The speed of the tight and loose pulleys should be 900 revolutions per minute. The jointer is a dangerous machine to use, and one cannot be too careful in operating it.

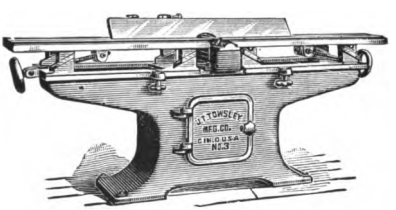

FIG. 132. — Jointer.

92. **Wood-turning Lathe.** — There are many different makes of wood-turning lathes on the market at the present time. One of the most popular makes for manual

Digitized by Google

training work is the Reed 10″ swing lathe, shown in Fig. 133. A sectional view of the headstock is shown in Fig. 134. These lathes are supplied with countershaft, large and small wood-turning face plates, pair of wood-turning centers, tee rest holder, three tee rests of different lengths, and blue print holder. At the close of each exercise in turning the student should dust off all parts of the lathe very carefully so that it is left in perfect order.

In wood turning the speed of the lathe should be adjusted to the size of the block that is to be turned. A small block should revolve faster than a large one. The following is a table of speed used in wood turning:—

Diameter of Work	Revolutions per Minute	Surface Speed in Feet per Minute
1 inch	(About) 3000	(About) 785
2 inches	2500	1308
3	1500	1178
5	1000	1259
8	600	1257
12	600	1880
18	300	1414
24	250	1571

93. Belts. — A belt should be of a uniform quality and the laps in the leather should be near together. If the laps are far apart, it indicates that the leather was cut in long strips, which cannot give a good quality of belting, for in so cutting an inferior part of the hide must be used. "Short lap" belts are considered the best. Belts should be run with the grain or hair side next to the pulley, because the hair side is the weaker side of the belting. By running a belt in this way the stronger side of the belt comes on the outside, where there is the greatest strain. They should be run hori-

Digitized by Google

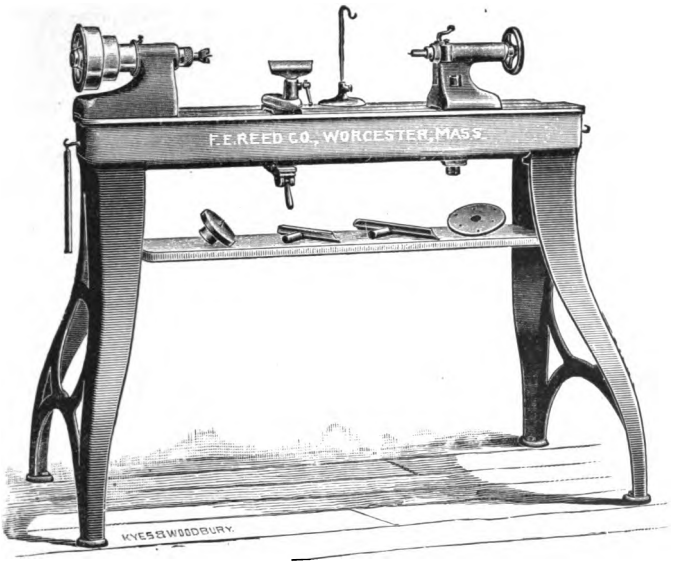

FIG. 133. — Wood-turning lathe.

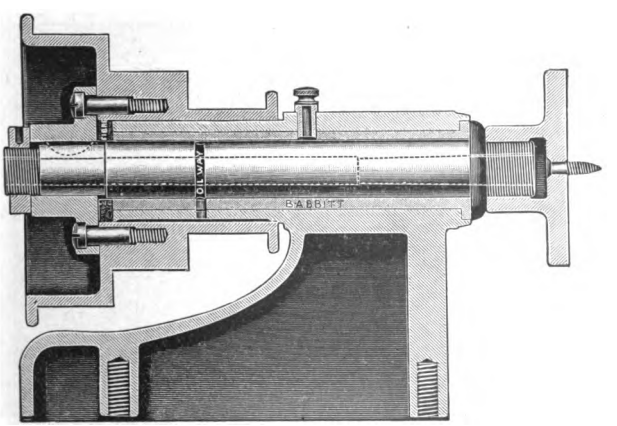

FIG. 134. — Sectional view of headstock.

Digitized by Google

zontally or at an angle, and with the drawing side underneath in order to get the best contact with the pulleys. Care should be exercised in getting belts wide enough to do a given amount of work without slipping. A belt should not be overloaded and should not be run too tight. The surfaces of belts should be kept in a pliable condition by using a good quality of belt dressing.

The strength of good leather belting is estimated at from 4000 to 4500 pounds per square inch of section. A well-laced joint is about one third as strong. The amount of space covered on a pulley is called the "arc of contact." When the pulleys are of equal sizes, the arc of contact is 180 degrees. If the pulleys are unequal in size, the arcs of contact are unequal, the larger pulley having the greater arc of contact. The best speed for belts is about 4000 feet per minute. Large pulleys are more desirable than small ones if the belt speed is not too high.

94. Formulæ used in selecting Belts. — To determine the horse power of belts: —

$$\text{Horse Power} = \frac{\text{Working Tension} \times \text{Width} \times \text{Speed}}{33000}.$$

To determine the working tension: —

$$\text{Working Tension} = \frac{\text{Horse Power} \times 33000}{\text{Width} \times \text{Speed}}.$$

To determine the width required to transmit given horse power: —

$$\text{Width} = \frac{\text{Horse Power} \times 33000}{\text{Speed} \times \text{Working Tension}}.$$

To determine speed: —

$$\text{Speed} = \frac{\text{Horse Power} \times 33000}{\text{Width} \times \text{Working Tension}}.$$

Digitized by Google

95. Belt Lacings. — Belt lacings are strong leather strings usually made from Calcutta cowhide, which is very tough, or from the best native cowhides, and are used in fastening the ends of a belt together. They should not be too large. A small lacing properly used is more effective than a large one improperly used. Figs. 135, 136, 137, and 138 show different methods of lacing belts.

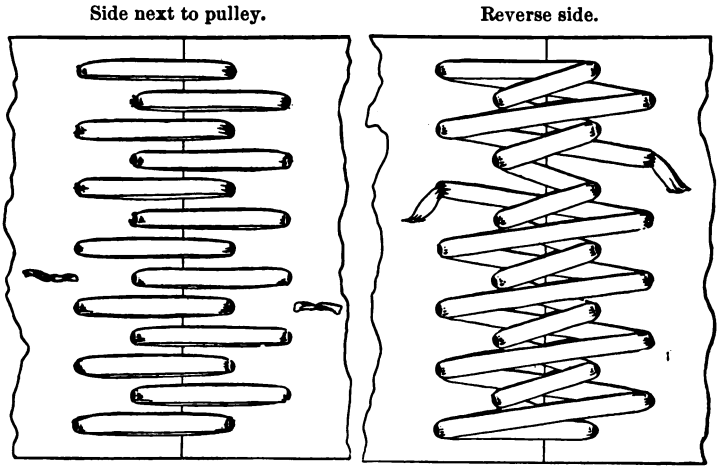

FIG. 135. — Old style lace.

96. Old Style Lace.[1] — Punch the holes as shown in Fig. 135, the first hole about one half an inch from edge and about seven eighths of an inch apart, the first row about five eighths of an inch from end of belt and the second row about three quarters of an inch back of the first row. Commence in the center and lace both ways

[1] The writer has permission from Bickford & Francis Belting Company, Buffalo, N.Y., to use the cuts showing different styles of belt lace; also much of the information on belts came from them.

Digitized by Google

to the edge of the belt with a single lace and then back to the center, having the lace straight on the pulley side of the belt and the cross on the reverse side of the belt. Use a small belt punch and small lacing.

97. New Style Lace. — This style of lace is recommended as being one of the strongest and most serviceable

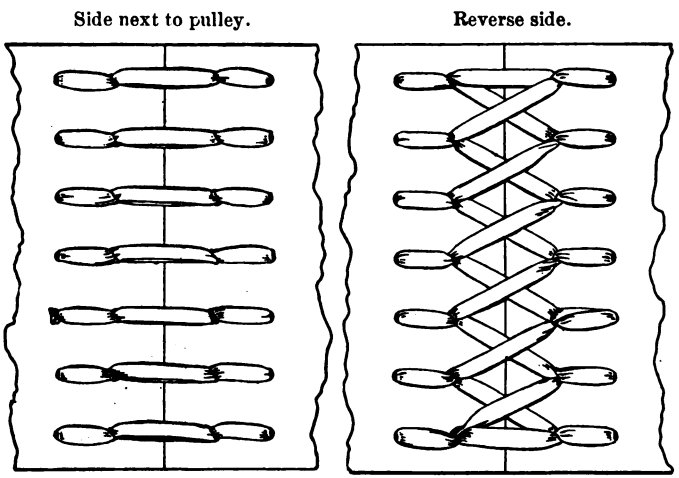

FIG. 136. — New style lace.

for general use. A much smaller hole and lace can be used and still give greater strength, and, according to the arrangement of the holes, the belt is weakened less than with almost any other method of lacing.

For this method of lacing use $\frac{1}{4}$ or $\frac{5}{16}$ inch lace for single belts and $\frac{3}{8}$ inch lace for double belts, except on extra large driving belts. Punch the first hole at least one half of an inch from the edge of the belt and about five eighths of an inch from the end. The centers of the

Digitized by Google

holes should be from three quarters to one inch apart, depending upon the width of the belt. The second row should be directly back of the first row and about three quarters of an inch distant. Commence at the center and lace both ways to the edge, using only the first row of holes. In working back to the center the second row of holes is used, giving a single strand of lace between the

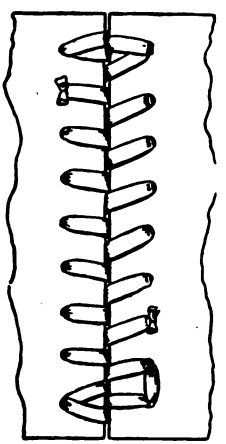

FIG. 137. — Single hinge lace.

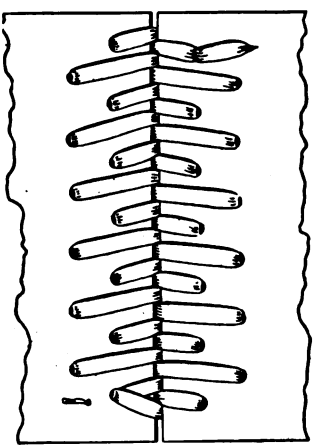

FIG. 138. — Double hinge lace.

first and second rows and a double strand between the two rows nearest the end of the belt. The straight lace should always be on the side next the pulley and the cross lace on the reverse side.

98. **Single Hinge Lace.** — In this style of lace a small hole and a small lace should be used. The holes should be about one half of an inch from the end and edge of the belt and the same distance apart. The corners should be taken off both sides of the ends of the belt to prevent

Digitized by Google

cutting the lace. Begin at the center and lace towards the edge, as shown in Fig. 137. Where belts run over small pulleys, this method is very effective, as the joint is very pliable.

99. Double Hinge Lace. — The same size punch and lace should be used as in the single hinge joint. The first row of holes should be about one half of an inch from the edge and end of the belt and three quarters to one inch apart. The second row should be about three quarters of an inch back of the first row and arranged as shown in Fig. 138, page 117.

FIG. 139. — Belt hook.

100. Belt Hooks. — Belt hooks are metallic hooks used in fastening the ends of a belt together. They are especially desirable on short belts because they will not stretch.

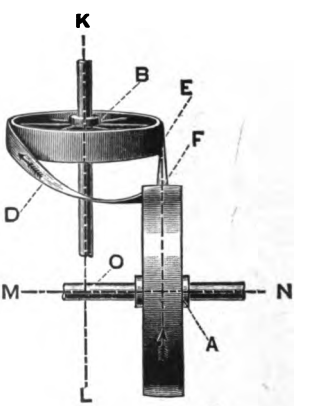

FIG. 140. — A simple method for lining up quarter twist belts. *A*, driving pulley; *B*, driven pulley; *C*, driving side of belt; *D*, driven side of belt; *E*, driving side driven pulley; *F*, Driven side driving pulley.

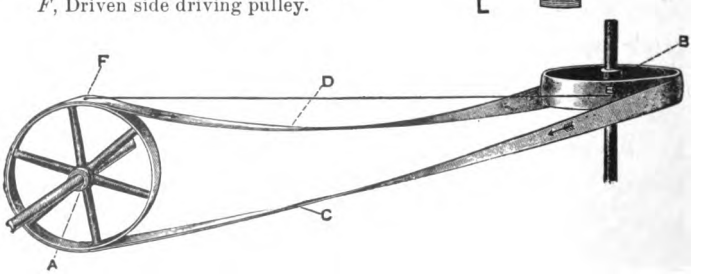

Digitized by Google

PART III

Wood[1] (Outline Study)

I. Classification of trees as to kinds of leaves and structure of wood.

A. Coniferous trees (needle-leaved, naked-seeded, such as pines, cedars, etc.), soft woods.

1. Bark — outside or protecting tissue, thickest and roughest near the base, forms about 10 per cent of the entire trunk in space.
2. Pith or medulla — thickness varying from $\frac{1}{5}$ of an inch in Norway pine to $\frac{1}{25}$ of an inch in cypress.
3. Sap wood — the living portion of the tree — composed of many-sided, thin-walled cells — the zone next to the bark containing about 50 annual rings — wood light in color — cells very active and very numerous — assist in the life processes of the tree. In old trees about 40 per cent sapwood, in young trees nearly all of the trunk sapwood.
4. Heart wood — the inner zone — fibrous bundles — the darker part of the log — cells lifeless — gives strength to the tree.
5. Annual rings — concentric rings one of which is added yearly — seen on the

[1] For "Key to the More Important Woods of North America," see Appendix A, page 233.

Digitized by Google

cross section of a log. By counting these rings the approximate age of a tree may be determined.

6. Spring and summer wood — the inner, softer, lighter-colored part of the annual ring caused by rapid growth called spring wood — the outer, or peripheral, firmer and darker-colored portion of the annual ring, caused by slower growth, called summer wood.
7. Anatomical structure — very porous — little tubes arranged in straight radial rows, resin ducts found in summer wood — cells long with pointed ends — dark lines, called medullary rays, run radially from the center toward the bark — structure simple and regular — growth stops during the winter.

B. The dicotyledonous, or deciduous trees (with two seed leaves, broad-leaved trees, such as oak, maple, beech, etc.).
   1. Bark, pith, sapwood and heartwood arranged the same as in coniferous trees, having the same function.
   2. Color — varies in different trees.
   3. Wood — translucent — exposure to air and sunlight changes color — kinds of wood sometimes distinguished by odor, such as cedar, pine, oak, etc.

C. The monocotyledonous trees (with one seed leaf, such as palms, yuccas, etc.).
   1. Structure — bundles of tissue arise, placed irregularly in the soft tissue or pith, extend from the apex of the leaf to the small ends of the roots — each new leaf has its own bundles of tissue in the stem.

Digitized by Google

II. Composition of wood.
   A. Cells of sapwood — composed of cellulose, albuminoids, starchy matter, oils and water holding in solution sugars, gums, and acids.
   B. Cells of heartwood — walls thick and contain a dense substance called *lignin* which gives elasticity and hardness to wood.
   C. Elements found in wood — carbon, hydrogen, oxygen, nitrogen, sulphur, potassium, iron, phosphorus, calcium, sodium, silicon, and sometimes traces of other elements.

III. Decay of trees.
   A. How detected — top branches refuse to send forth leaves — dead and broken branches — decay of bark.
   B. Causes — diseases of tree, parasitic insects, fungi, injury, etc.

IV. Lumbering.
   A. Season for cutting trees — late fall and winter, because the growing and conducting cells are less active.
   B. How cut — with axes and saws — limbs trimmed — trunk of tree cut to desired lengths for logs — logs transported to saw mills and sawed into lumber — lumber piled up to season — lumber transported to dealers or to manufacturers.

V. Properties of wood.
   A. Weight — wood substance about 1.6 times as heavy as water — depends upon the amount of moisture in the wood substance — sapwood heavier than heartwood — the wood of saplings heavier than the wood of old trees — woods vary in weight from 30 to 40 pounds per cubic foot.

Digitized by Google

The following table gives the weight of kiln-dried wood of different species:—

Weight of Kiln-dried Wood of Different Species

(Water 62 pounds to cu. ft.)	Approximate Specific Weight	Approximate Weight of — 1 cubic foot	Approximate Weight of — 1000 feet of lumber
(*a*) Very heavy woods: Hickory, oak, persimmon, osage orange, black locust, hackberry, blue beech, best of elm, and ash	0.70–0.80	Pounds 42–48	Pounds 3,700
(*b*) Heavy woods: Ash, elm, cherry, birch, maple, beech, walnut, sour gum, coffee tree, honey locust, best of Southern pine, and tamarack	.60– .70	36–42	3,200
(*c*) Woods of medium weight: Southern pine, pitch pine, tamarack, Douglas spruce, Western hemlock, sweet gum, soft maple, sycamore, sassafras, mulberry, light grades of birch and cherry	.50– .60	30–36	2,700
(*d*) Light woods: Norway and bull pine, red cedar, cypress, hemlock, the heavier spruce and fir, redwood, basswood, chestnut, butternut, tulip, catalpa, buckeye, heavier grades of poplar	.40– .50	24–30	2,200
(*e*) Very light woods: White pine, spruce, fir, white cedar, poplar	.30– .40	18–24	1,800

B. Seasoning — giving up the moisture that is in the wood.

The following table gives the number of pounds of water lost in drying 100 pounds of green wood in the kiln:—

Digitized by Google

Pounds of Water lost in Drying 100 Pounds of Green Wood in the Kiln

	Sapwood or outer part	Heartwood or interior
(1) Pines, cedars, spruces, and firs	45–65	16–25
(2) Cypress, extremely variable	50–65	18–60
(3) Poplar, cottonwood, basswood	60–65	40–60
(4) Oak, beech, ash, elm, maple, birch, hickory, chestnut, walnut, and sycamore	40–50	30–40

The lighter kinds have the most water in the sapwood, thus sycamore has more than hickory.

C. Shrinkage — the change in size and shape of wood when moisture is given up, causing warping and checking — shrinkage greater in sapwood than in heartwood.

The following table gives the approximate shrinkage of a board, or set of boards, 100″ wide, drying in the open air: —

Approximate Shrinkage of a Board, or Set of Boards, 100″ wide, Drying in the Open Air

	Shrinkage
	Inches
(1) All light conifers (soft pine, spruce, cedar, cypress)	3
(2) Heavy conifers (hard pine, tamarack, yew), honey locust, box elder, wood of old oaks	4
(3) Ash, elm, walnut, poplar, maple, beech, sycamore, cherry, black locust	5
(4) Basswood, birch, chestnut, horse chestnut, blue beech, young locust	6
(5) Hickory, young oak, especially red oak	Up to 10

D. Stiffness or elasticity — the rigidity of a stick of timber which causes it to be bent with difficulty.

Digitized by Google

LAWS

1. Deflection varies directly as the cube of the length.

2. Doubling the width doubles the stiffness.

3. Doubling the thickness increases the stiffness about eightfold.

4. Stiffness varies with the weight (heavier wood being stiffer than light wood).

The modulus (measure) of stiffness or elasticity is determined by the formula—

$$E \text{ (Modulus of elasticity)} = \frac{Wl^3}{4Dbd^3}.$$

W = weight or load; l = length;
b = breadth; d = depth; D = deflection.

The number of pounds which will bend a piece of sawed timber by one inch is found by the formula—

$$\text{Necessary weight} = \frac{4Ebd^3}{l^3}.$$

NOTE.—An allowance must be made on the strength of timbers because of the irregularities in the structure of the wood due to knots, cross grain, decay, etc. This allowance is called the "factor of safety." Only about one sixth or one tenth of the strength is considered safe. Timbers in a building are made from 6 to 10 times as heavy as the calculations require. When a stick has been bent beyond its "elastic limit" it still requires an increase of from 30 to 50 per cent to the weight before the stick breaks.

Digitized by Google

The following table gives the general averages of the stiffness of dry wood:—

Table of Stiffness (Modulus of Elasticity) of Dry Wood.— General Averages

Species	Modulus of elasticity $E=\frac{Wl^3}{4Dbd^3}$ per square inch	Approximate weight which deflects by 1 inch a piece—	
		1 by 1 inch and 12 inches long	2 by 2 inches and 10 feet long
	Pounds	Pounds	Pounds
(1) Live oak, good tamarack, longleaf, Cuban, and shortleaf pine, good Douglas spruce, western hemlock, yellow and cherry birch, hard maple, beech, locust, and the best of oak and hickory	1,680,000	3,900	62
(2) Birch, common oak, hickory, white and black spruce, loblolly and red pine, cypress, best of ash, elm, and poplar and black walnut	1,400,000	3,200	51
(3) Maples, cherry, ash, elm, sycamore, sweet gum, butternut, poplar, basswood, white, sugar and bull pine, cedars, scrub pine, hemlock, and fir	1,100,000	2,500	40
(4) Box elder, horse chestnut, a number of western soft pines, inferior grades of hard woods	1,100,000	[1] 2,500	40

E. Cross-breaking or bending strength.—

LAWS

1. The strength of a timber varies approximately with the squares of the thick-

[1] Less than.

Digitized by Google

ness and decreases directly with increasing length.

2. Seasoning increases, moisture decreases, the strength.

3. Knots and cross grain weaken the holding power of timber.

The cross-breaking strength, or "modulus of rupture" is obtained by means of the formula:—

$$\text{Strength of extreme fiber} = \frac{3\,Wl}{2\,bd^2}.$$

The following table gives the strength of well-seasoned, select pieces, load acting in the middle of the block, which is supported at the ends:—

Strength in Cross-breaking of Well-seasoned, Select Pieces

	Strength of the extreme fiber $f = \frac{3\,Wl}{2\,bd^2}$ per square inch	Approximate weight which breaks a stick —	
		1 by 1 inch and 12 inches long	2 by 2 inches and 10 feet long
	Pounds	Pounds	Pounds
(1) Robinia (locust), hard maple, hickory, oak, birch, best ash and elm, longleaf, shortleaf, and Cuban pines, tamarack	13,000	720	570
(2) Soft maple, cherry, ash, elm, walnut, inferior oak, and birch, best poplar, Norway, loblolly and pitch pines, black and white spruce, hemlock, and good cedar	10,000	550	440
(3) Tulip, basswood, sycamore, butternut, poplars, white and other soft pines, firs, and cedars	6,500	350	280

Digitized by Google

F. Tension and Compression. —

Tension: The amount of force required to cause the fibers to pull apart.

Compression: The approximate weight required to crush a given block of wood endwise.

Affected by the position of the fibers, as crossgrained, oblique position of grain, and straightgrained.

The following table gives the ratio of strength in tension and compression: —

Ratio of Strength in Tension and Compression, showing the Difference between Rigid Conifers and Tough Hard Woods

	Ratio: $R = \frac{\text{Tensile strength}}{\text{compressive strength}}$	A stick 1 square inch in cross section. Weight required to—	
		Pull apart	Crush endwise
		Pounds	Pounds
Hickory	3.7	32,000	8,500
Elm	3.8	29,000	7,500
Larch	2.3	19,400	8,600
Longleaf pine	2.2	17,300	7,400

Strength in Compression of Common American Woods in Well-Seasoned Select Pieces

[Approximate weight per square inch of cross section requisite to crush a piece of wood endwise.]

	Pounds
(1) Black locust, yellow and cherry birch, hard maple, best hickory, longleaf and Cuban pines, and tamarack	9,000 +
(2) Common hickory, oak, birch, soft maple, walnut, good elm, best ash, short leaf and loblolly pines, western hemlock, and Douglas fir	7,000 +
(3) Ash, sycamore, beech, inferior oak, Pacific white cedar, canoe cedar, Lawson's cypress, common red cedar, cypress, Norway and superior spruces, and fir	6,000 +

Digitized by Google

	Pounds
(4) Tulip, basswood, butternut, chestnut, good poplar, white and other common soft pines, hemlock, spruce, and fir	5,000 +
(5) Soft poplar, white cedar, and some Western soft pines, and firs	4,000 +

G. Shearing — the breaking of wood along the fibers, as the shearing of a mortise in a mortise-and-tenon joint. Green wood shears more easily than dry wood.

H. Cleavability — that property by virtue of which the fibers can be split, as with an ax in splitting stove-wood. Cleavage along the radius is easier than along the tangent of the block, also easier in green wood than in dry wood.

I. Flexibility — that property of wood by virtue of which it can be bent, as hickory — hard woods more flexible than soft woods — moisture increases flexibility — knots and cross grain diminish flexibility.

J. Toughness — a combination of strength and pliability, as in hickory — woods that offer great resistance to longitudinal shearing and tension.

Digitized by Google

PART IV

Fastening Devices Used in Wood Construction

Nails and Nailing

We read that "a small, pointed piece of metal, usually with a head, to be driven into a board or other piece of timber, and serving to fasten it to other timber, or left projecting as from a wall, to hang any thing upon" is a nail. There are many kinds of nails, and they are named either from the use to which they are applied, or from their shape. According to the United States Patent office nails are classified as cut, wrought, horse-shoe, shoe, barbed, composition, button, carpet, coffin, sheathing, galvanized, harness, leather work, picture, siding, slating, trunk, upholstery, weather tiling, and screw nails.

Before the beginning of the nineteenth century nails were usually made by hand forging. A large part of this work was done by women and children, and their poverty and degradation is one of the saddest phases in the history of English industrial life. In those days nails were expensive and consequently were not used as extensively as they are at the present time. Nails were first made by machines in the United States, and in fact all of the more important varieties originated and developed here. This is a natural result, for, since colonial times, wood has been used extensively in the building of houses,

Digitized by Google

furniture, fences, etc., and as a demand arose for a certain kind of nail in the construction of certain things it was designed and wrought out of the most practical material which was available. Expense was not the first thing considered. Our forefathers did things in a practical way, even to the making of a nail. That nail had to possess strength, holding power, and lasting qualities, regardless of cost. We are told that the first cut nails were made in New England late in the eighteenth century by cutting strips from sheet metal and heading them with a hammer while held in a vise. Gradually the shape of these nails was changed to meet varied needs, and the demand increased so that it was impossible to make by hand all the nails that were needed. In 1810 a machine was invented in the United States which made nails at the rate of one hundred per minute. As a result nails grew cheaper and became popular fastening devices. During the past century about four hundred patents have been issued for improvements in the making of nails. They are now made very readily and with little expense.

The term "penny" is used to designate the size of certain kinds of nails; thus, threepenny, fourpenny, sixpenny, etc. The term "penny" when used in this way is supposed to be a corruption of "pound." A fourpenny nail was such that one thousand of them weighed four pounds, eightpenny such that one thousand of them weighed eight pounds, etc.

The most common forms of nails are the wire nails, cut nails, and wrought nails. The wire nail consists essentially of a cylindrical piece of wire of suitable length,

Digitized by Google

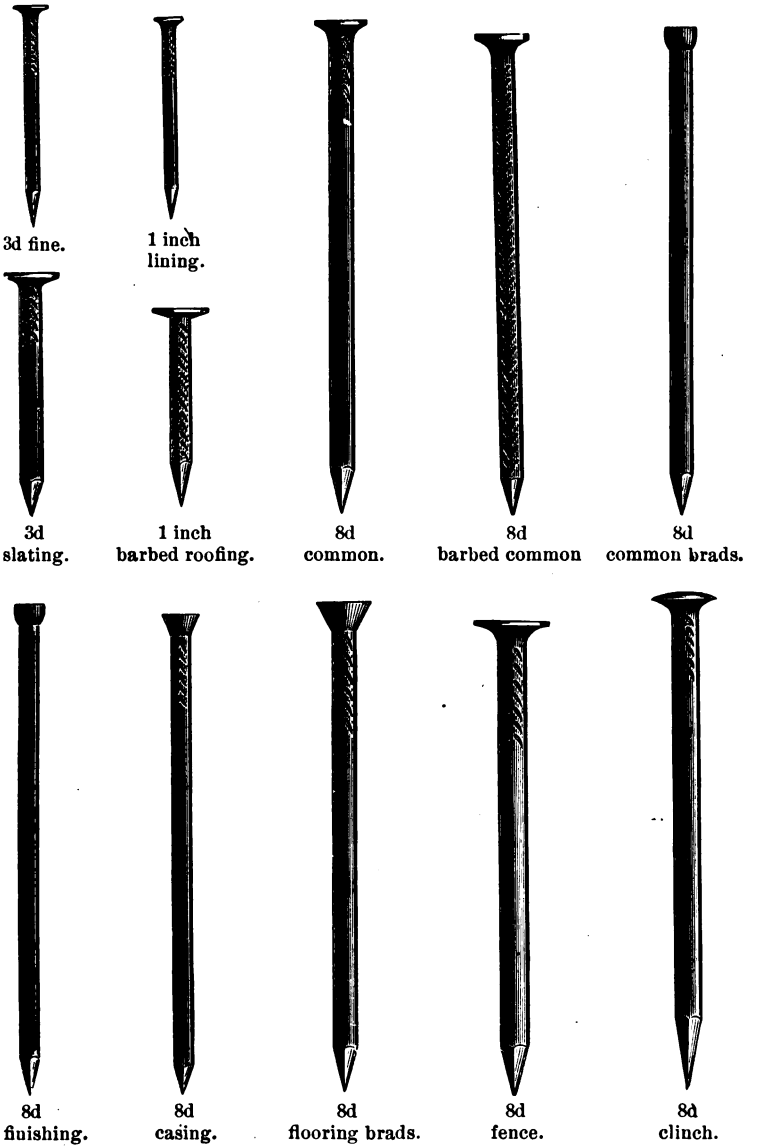

FIG. 141. — Steel wire nails.

Digitized by Google

with one end properly sharpened and the other end flattened in such a way as to form a head. A good wire nail has great holding power and is very durable. It may be clinched, which is often necessary, and this adds to its practical qualities.

A cut nail, as its name suggests, is cut from iron or steel, as the case may be. The thickness of the metal out of which the nail is cut corresponds to the thickness of the nail to be made. These nails thus have two flat sides which are parallel. The two edges taper from the head of the nail toward the point, forming a wedge. The point and head of a cut nail are rectangular in shape with the wide part of one corresponding to the narrow part of the other. To avoid splitting the wood in driving a cut nail, the wide part of the point should enter the wood across the grain and never parallel with the grain. By driving the nail in this way the wedge acts in the direction in which the wood is strongest, that is, in the direction of the length of the fibers, and this increases the holding power of the nail. The cut nails have not such universal use as the wire nails.

The wrought nails are made of wrought iron, which is the purest form of iron known in the arts. These nails are soft, very tenacious, and at a high temperature may be welded. They are used where clinching is desired. One extensive use of these nails is in the hanging of barn doors with strap hinges.

To drive a nail, hold it between the fingers and thumb of the left hand in the desired position, grip the hammer near the end of the handle with the right hand, and, with a free movement of the right arm from the elbow rather

Digitized by Google

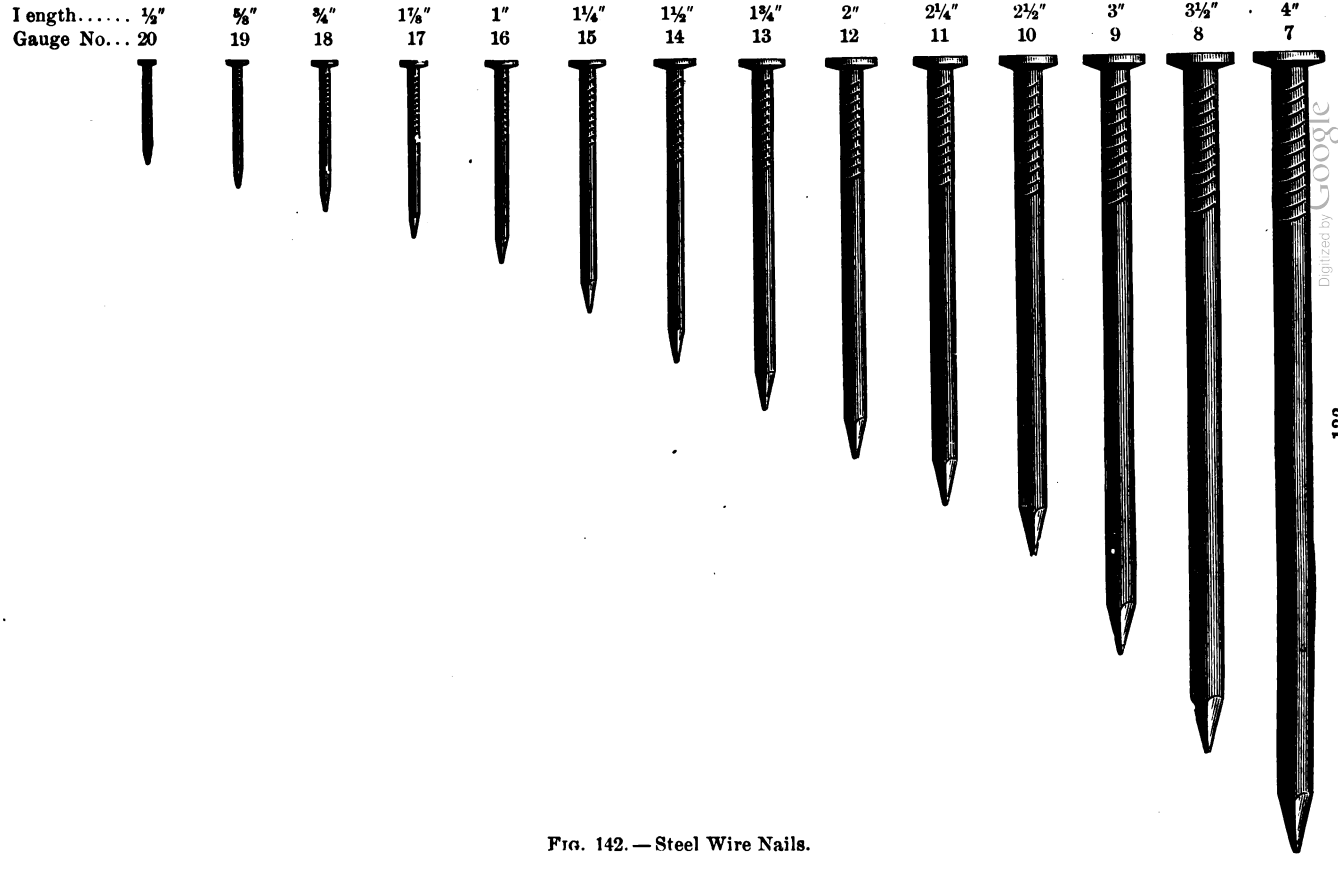

FIG. 142. — Steel Wire Nails.

Digitized by Google

than from the wrist, strike the head of the nail squarely with a quick, hard blow with the whole face of the hammer rather than with one edge. Repeat, driving the nail a little deeper into the wood at each stroke. The last stroke of the hammer is an important one, for it should send the nail into the wood so that the top of the nail head is even with the surface of the wood, and the stroke must be made in such a way that the hammer does not mar the wood. Sometimes in driving brads a nail set is used to drive the head beneath the surface of the wood. The holding power of a nail is increased if it is driven in the wood at a slight angle. Where several nails are used in fastening pieces of wood together, it is well to drive the nails in pairs in such a way that they form "dovetails" in the wood. They are able to resist a much greater strain when driven in this way, than when driven straight into the wood, for before the pieces can pull apart the wood must break, or the nails must bend, or both.

To draw a nail, place a block of wood under the head of the hammer to lift it up to the height of the head of the nail and to protect the wood underneath. Allow the claw of the hammer to catch the head of the nail, and pull the handle of the hammer over in such a way as to raise the claw and the nail will come out. Try to draw the nail straight out to avoid breaking and bending the nail. To use a hammer, the most ancient of all tools, in a skillful way, so that it is made to do its work with efficiency, requires no small amount of training, and its use should be introduced early in connection with manual training work.

Digitized by Google

FIG. 143. — Steel wire brads.

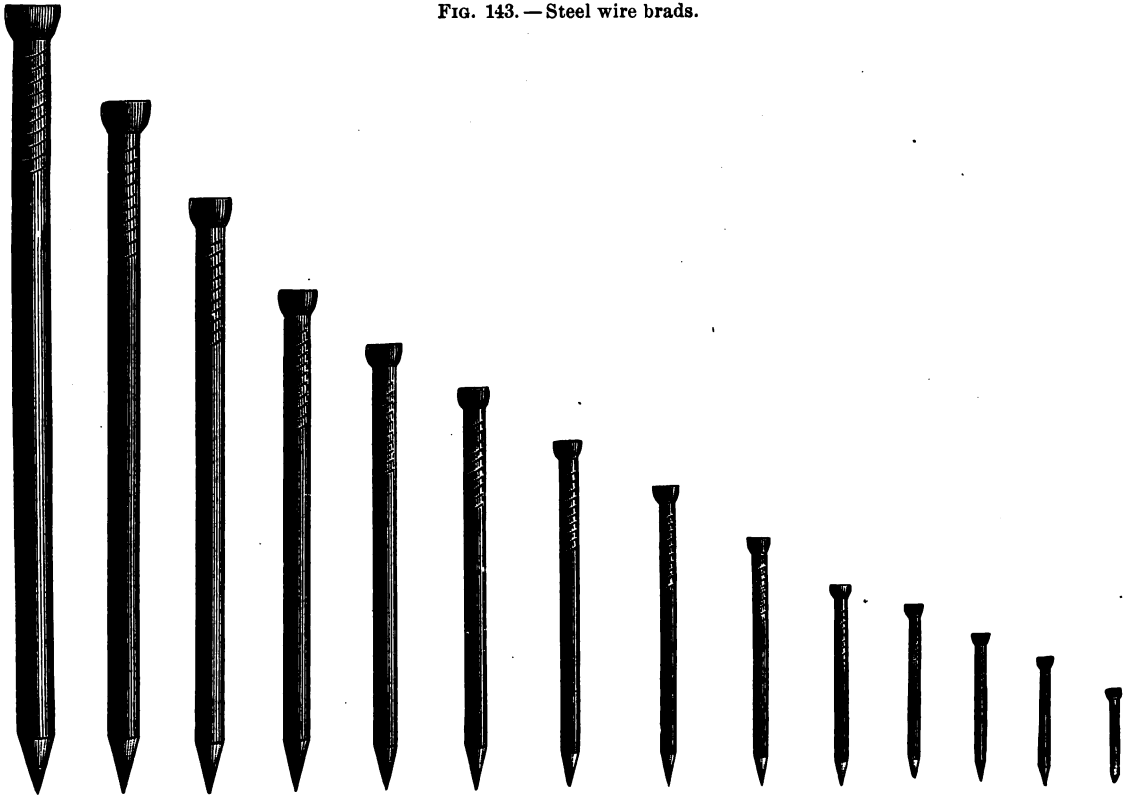

Length.....	4″	3½″	3″	2½″	2¼″	2″	1¾″	1½″	1¼″	1″	⅞″	¾″	⅝″	½″
Gauge No.....	9	10	11	13	14	14	15	16	17	18	19	19	20	20

Digitized by Google

The Screw as a Fastening Device in Wood Construction

Another very important fastening device in wood construction is the screw. The screw, as one of the mechanical powers, is a modification of the inclined plane, and may be conceived as a cylinder with a spiral ridge called the "thread" winding about its circumference. To show the children that this is a modified inclined plane, cut a right-angled triangle from a piece of paper and wind it around a lead pencil so that the hypothenuse of the triangle marks the spiral thread of the screw. The vertical distance between any two consecutive threads of the screw measured parallel to the axis is called the "pitch" of the screw, and the angle of the inclined plane measured between any two successive points is spoken of as the "inclination" of the screw.

The screw is supposed to have been invented by Archimedes, a celebrated Greek philosopher, about 250 B.C. He constructed an instrument for raising water to a higher level. This instrument was made by winding a flexible tube around a cylinder in the form of a screw. When the screw was placed in an inclined position, with the lower end immersed in water, by causing the screw to be revolved, the water was raised to a higher level. Archimedes is supposed to have invented this screw for the purpose of lifting water high enough to launch a large vessel built under his direction. The screw was used in Egypt in the days of Hero of Alexandria, and at the beginning of the Christian era was used for various purposes by nations on the shores of the Mediterranean.

Digitized by Google

There are very many varieties of screws, but the wood screw, so called because of its exclusive use in wood, is the most common, and it has been made by machinery for many years. At first wood screws had blunt points, and it was necessary to make a hole in the wood before the screw could be driven. This, of course, had its disadvantages, and, as a result, improvements followed. In 1850 Thomas J. Sloan, a United States citizen, devised what is known as the gimlet-pointed screw and also the machinery for its construction. The threads of this screw were formed by cutting out the metal between the threads. This method of cutting tended to weaken the screw, so that when it was driven into hard wood it frequently broke. Now, by a system of rolling combined with compression, the threads are raised and all the metal of the wire out of which the screw is made is used in its construction. This makes a stronger screw and increases its holding power.

Wood screws are usually classified as *flat head, round head, oval head, fillistered head, Rogers' flat head drive,* and *diamond point oval head drive.* In determining the size of a wood screw two things are to be considered — the length of the screw and the size of the wire out of which it is made. The length varies all the way from a quarter of an inch to six inches, while the size of the wire varies from naught to thirty. Screws are made of steel, but may be finished in a variety of ways. They may be bright, blued, brassed, bronzed, Japanned, lacquered, or tinned. The finish depends upon their use.

The screw, when properly selected and driven, is capable of resisting a much greater force than a nail. The

Digitized by Google

Wood screw.

Oval head.

Fillister head.

Rogers' drive.

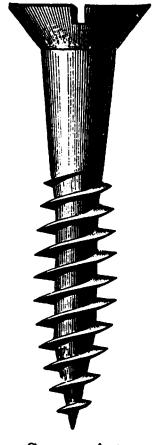

Spur point.

Flat head.

Round head.

FIG. 144. — Wood screws.

Digitized by Google

screw is a better fastening device than the nail, other things being equal, for when it works loose, it may be tightened, while nails have to be redriven. The use of screws, however, is not so great as the use of nails because they are more expensive and it is more of an effort to drive a screw than it is to drive a nail.

Screws are used in wood construction where there is a great strain and where nails will not hold. They are sometimes used for æsthetic effects.

To drive a screw a screw-driver is used. This is a very common tool, but it is not always used properly. To understand and use any tool correctly, one must understand the function of the parts, and also the relation of the parts to the function of the tool. As a rule a good screw-driver has a long and slightly concave bevel which fits the slot in the screw, while as a rule a poor screw-driver has a short bevel and will press only on the top of the slot, causing it to slip. Such a screw-driver is not a desirable tool to use. A long screw-driver works much better than a short one. In theory one should keep the screw-driver in line with the screw, but in actual practice it wobbles, forming a circle as the screw turns, thus increasing the leverage. Now, the longer the screw-driver the larger the circle described, and the larger the circle the greater the leverage. On this fact is based the principle of the screw-driver bit which is used with a brace. With a brace and screw-driver bit one can drive a screw much faster and much easier than with an ordinary screw-driver.

Sometimes soap is rubbed on a screw to make it drive easily, but this is not necessary when working with soft

Digitized by Google

wood. It is quite a help when driving a long screw into hard wood. With hard wood it is well to bore a hole to receive the screw, but this must be done with discretion. The hole must not be too large nor too deep. It must be remembered that screws will not hold well in end wood. In order for them to do their work effectively they must be driven between the fibers.

When two pieces of hard wood are to be fastened together, it is well to make a hole in the outer piece that will allow the screw to slip through freely up to the head of the screw, and when driven into the second piece the screw will act as a clamp, drawing the two pieces together. Usually a countersink is used in the hole before the screw is allowed to enter. This makes a hole so that the head of the screw enters the wood flush with the surface, or it may be driven below the surface of the wood so that the head can be covered up if desired.

In rough work with soft wood a screw may be started and driven about halfway with a hammer and finished with a screw-driver; but this method tends to lessen the holding power of the screw, for in driving the screw with a hammer, the fibers of the wood are broken so they cannot hold the screw sufficiently.

In the use of screws, as well as in all other operations in wood construction, great care should be exercised. One must know when screws are needed as a fastening device, the kind and size to select, and how to drive them effectively. The work must be thoughtfully done in order to become more intelligent regarding materials and operations. A study of Fig. 144 will help in the selection of the right screw for a given purpose.

Digitized by Google

Glue as a Fastening Device in Wood Construction

In wood construction, especially in joinery and cabinet-making, a process is involved known as gluing, whereby glue is employed to hold the different parts together. In the shop the technical processes of gluing must be emphasized, but in order that the pupil master the processes in an intelligent way, he must know what glue is, the different kinds of glue, how and of what made, and the uses of the different kinds. He must understand the nature of the wood to be glued. In short, to master a process, one must look intelligently for information regarding the materials and tools employed, and then by associating this information with the process in actual practice an intelligent understanding of the principles of the process will follow.

Glue is a viscous substance made from the scraps of hides, horns, hoofs, etc., which accumulate at large packing houses. These scraps are washed in limewater, then boiled and skimmed. When the liquid reaches a certain point, it is strained, cooled in moulds, cut into pieces, and dried upon nets. Glue is manufactured largely in the United States and in all countries where cattle are raised. In some countries, like France and Germany, a great quantity of glue is made from bones, but the quality is not as good. It is said that the best glue in the world comes from Scotland.

In the manufacture of certain kinds of glue isinglass is used. Isinglass is a gelatine prepared from the air bladder of such fish as the sturgeon, cod, weakfish, hake, etc. It is also one of the principal ingredients in prepared

Digitized by Google

jellies, confections, and gumdrops. There is also a kind of isinglass known as "Japanese isinglass." This is prepared from a seaweed. Most of the isinglass made for commercial use comes from Russia, Brazil, and the United States.

Isinglass is used in the manufacture of *white fish glue, isinglass glue,* and *waterproof glue.*

White fish glue, or diamond cement, as it is sometimes called, is made of isinglass dissolved in alcohol. *Isinglass glue* is made by soaking isinglass in cold water; when the isinglass is swelled enough, it is put into spirits of wine and heated in a bottle plunged in a bath, with powdered chalk added. *Waterproof glue* is made by boiling two ounces of isinglass to a pint of skim milk until the requisite consistency is obtained.

Marine glue is made of shellac and caoutchouc, equal parts, dissolved in separate portions of naphtha, and then mixed. Marine glue is insoluble in water and is therefore used largely in shipbuilding.

There is also an *albumen glue* which is made of partially decomposed gluten obtained from wheat flour in the manufacture of starch.

Caseine glue is manufactured from curds of milk. It is an excellent glue for manual training work. There is another article of a similar nature on the market called *dextrine glue;* this is manufactured from potatoes and corn.

The uses to which glue is put are many. Among some of the more important might be mentioned, in addition to joinery and cabinetmaking, paper making, match making, bookbinding, in making sizing for paper hanging, etc. In the manufacture of hats and bonnets it is

Digitized by Google

used for stiffening straw, cotton, etc. It is the glue in the straw that makes one's hat have a sticky feel when wet.

Glue comes to us in flakes to be prepared for use, or in liquid form ready for use. For woodwork it is better to buy the ordinary flakes and prepare them as the glue is needed. There are different grades of glue, but it is well to buy the best grade, which costs about twenty cents per pound. A poor quality of glue is worse than no glue at all. It is worthless. Glue is prepared in a glue heater.

FIG. 145. — Glue pot and jacket.

Glue Heaters. — A glue heater is nothing more than a double boiler consisting of an outer boiler, called a jacket, in which water is boiled, or through which steam passes, and an inner boiler in which the glue is prepared. Fig. 145 shows a gluepot and jacket which is used over a gas burner. In using this one must be very careful not to let the water in the outer boiler boil completely away and cause the glue to be burned. Add water when it is needed, for it boils away rapidly. When the glue reaches the right stage to be used, turn the gas under it very low, and, if the jacket is nearly full of water, it should last nearly all day without being replenished. Where practicable a steam glue heater,

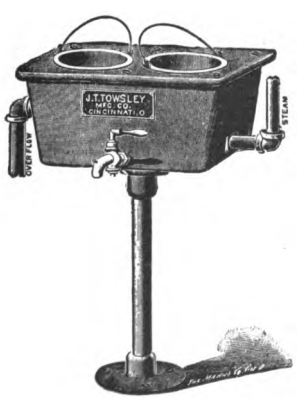

FIG. 146. — Steam glue heater.

Digitized by Google

Fig. 146, or a contact glue heater, where the jacket comes in contact with a steam heater ring, Fig. 147, should be used for the sake of convenience and economy. The steam can be taken from the heating plant, which would be a saving of gas. With steam there is no danger of burning the glue. For our use a gluepot should have capacity for about two quarts of glue. If a steam heater is used, it should have two half gallon pots so that one pot can be kept hot while the other one is in use. Often this is a saving of much time to be able to exchange a cold pot of glue for hot glue.

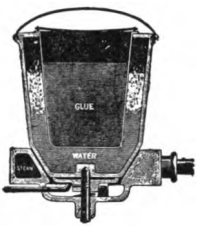

FIG. 147. — Contact glue heater.

In preparing glue the flakes are put in the gluepot and covered over with cold water and allowed to stand several hours so it will absorb a quantity of water, thus rendering it like jelly. Then it is heated until it becomes hot and thin enough to drip from the brush in a thread or stream. Care must be taken that it is not too thick nor too thin, and it must be applied hot. The gluepot must be kept clean. Care must be taken not to let the glue burn, for it burns easily if water is not kept in the outer vessel. Burning glue is very offensive and it cannot be used after it has been scorched, as its virtue is destroyed. It is not well to heat glue over and over again. After it has been heated two or three times it is well to clean the pot and make a fresh quantity, for repeated heatings tend to destroy the holding properties of the glue.

Digitized by Google

Parallel layers of wood may be glued together, but glue will not hold end woods. The surfaces which are to be fastened together must be planed true so that they fit perfectly. Glue is applied hot and quickly to each surface with a brush and then the surfaces are clamped securely together. After about twenty-four hours the clamps may be taken off. The glue being hot and thin enters the pores of the wood, getting a foothold, and when it hardens forms a joint that is stronger than the wood itself. When the gluing is well done, the wood will break in other places before it will break at the glue joint. It is well to warm the wood before the glue is applied so that the glue is not chilled before the clamps are set. This, however, is not necessary if one works fast enough and in a warm room. Of course the surfaces which are fastened together must be clean, *i.e.* free from dust, varnish, or anything that will not allow the glue to enter the pores of the wood. It is a good plan to clamp the pieces together to see that they fit and that the clamps work properly before the glue is applied. See that everything is ready, then apply the glue quickly and clamp before it "sets" on you.

The clamps which are used for ordinary gluing are the bar clamps, hand screws, and the iron clamps. The price of these clamps depends upon the size and kind. When two edges are to be glued together, the faces should be planed after the gluing rather than before, for then the glue which is squeezed out by the pressure of the clamps can be removed and a perfect surface obtained. Care must be taken, however, that the grain of the wood in each piece runs in the same direction.

L

Digitized by Google

There are many gluing exercises which can be introduced in woodwork, all of which tend to give a broader experience. Among some of these we might mention the bread board (used in cutting bread), which is made by gluing three ($\frac{7}{8}'' \times 1\frac{1}{2}'' \times 12''$) cherry strips with two ($\frac{7}{8}'' \times 1\frac{1}{2}'' \times 12''$) pine strips so that the strips are arranged alternately. After gluing, the board is dressed and then cut out in the form of an ellipse. There is something very fascinating about uniting woods of different color into one piece so that the glue which holds the wood cannot be seen. Boys are delighted when they can do this work.

Another piece of work in gluing which is important is the chessboard. This is important because it teaches certain principles about building up a series of glue joints, how to prevent warping, and how to make a glue joint hold when it is necessary to glue end wood together. All of these are valuable problems to be worked out in wood construction.

Wood Fastenings (*dowels, pins, cleats, keys, and wedges*)

Dowels are important fastening devices. They are turned wooden pins varying in diameter from $\frac{3}{16}''$ to $1''$. They are made from different wood, white birch being the kind of wood that is used most. In cabinetwork the $\frac{1}{4}''$ dowel pin is used most. They can be bought in bundles (500 in a bundle) and in $36''$ lengths.

Dowel pins may be made by driving a small piece of wood through a hole in a "dowel plate." A dowel plate may be made by drilling holes, say $\frac{1}{4}''$, $\frac{3}{8}''$, and $\frac{1}{2}''$ in

Digitized by Google

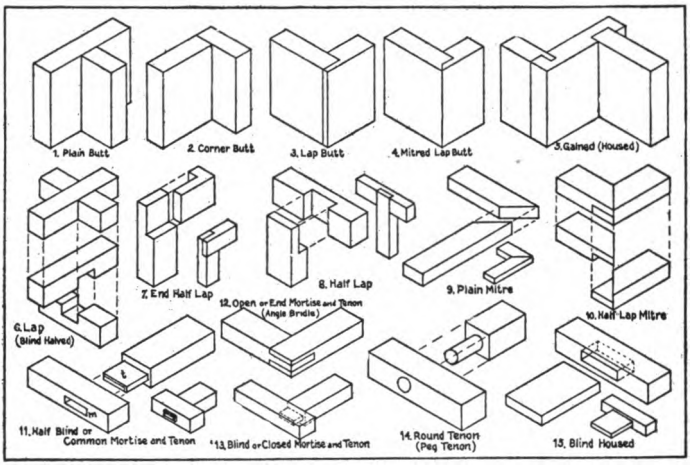

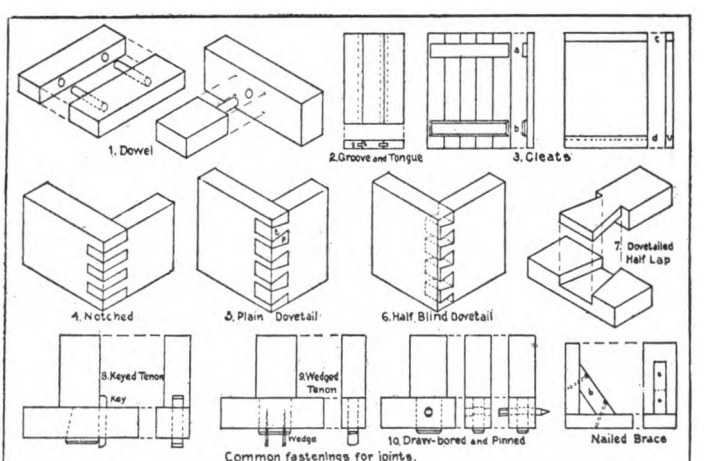

FIG. 148. — Common joints and wood fastenings.

Digitized by Google

diameter, through a cast steel plate that is from a $\frac{1}{4}''$ to a $\frac{1}{2}''$ in thickness.

As to the method and use of dowel pins, pins, cleats, keys, and wedges, see Fig. 148, page 147.

In designing joints and fastenings in wood construction Rankine has given five principles to be observed. They are:—

1. "To cut the joints and arrange the fastenings so as to weaken the pieces of timber that they connect as little as possible."

2. "To place each abutting surface in a joint as nearly as possible perpendicular to the pressure which it has to transmit."

3. "To proportion the area of each surface to the pressure which it has to bear, so that the timber may be safe against injury under the heaviest load which occurs in practice, and to form and fit every pair of such surfaces accurately, in order to distribute the stress uniformly."

4. "To proportion the fastenings so that they may be of equal strength with the pieces which they connect."

5. "To place the fastenings in each piece of timber so that there shall be sufficient resistance to the giving way of the joint by the fastenings shearing or crushing their way through the timber."

Digitized by Google

PART V

Wood Finishing

Aims. — There are two chief aims which should govern all methods of wood finishing, viz., *preservation of wood* and *artistic finish*. Wood exposed to atmospheric conditions (moisture being the greatest enemy to the preservation of wood) without a suitable finish which will close the pores of the wood, and hence shut out the action of the atmosphere, will change in shape and color, and will soon decay. But with a proper treatment so that moisture cannot get into the pores, timbers will last for many years. If a block of maple is allowed to stand in a vat of boiling resin, for twenty-four hours, the pores become filled with the resin which preserves the wood against decay for ages. Not long since the writer saw this process of treating maple which was to be used under water. It is only a working out in another way of the principle of the closing of the pores in wood for preservation. A wood finish, then, to be most effective must possess this quality of preservation.

But what constitutes an *artistic finish*? A piece of quartered oak is stained with a suitable weathered oak stain, rubbed down so that the grain is brought out, and then waxed to close the pores and to give a smooth finish. If this work is well done, we say that the oak has an *artistic* finish. One wishes to paint a house. Paints are selected which harmonize and are then applied, and

Digitized by Google

we say that the house has an *artistic* finish. Some models which are made in manual training are improved by decoration. This is especially true of some of the things that are made in soft woods. The ends of the book rack may be made more pleasing by some design put on in color. The design, however, must be appropriate, and the colors must be selected with great care. They must also be applied properly. When this is done, the book rack may have an *artistic* finish. There is, therefore, a wide difference in wood finishing. Some people prefer the wood finished in the natural color, others do a great deal of staining, while still others do a good deal in the way of applied design.

The field of applied design is new in manual training work and is full of possibilities, but it should not be overemphasized. It furnishes a happy relationship between the art teaching and the shop teaching. In this work the art teacher and the manual training teacher should work together in order to get the best results. It is not the purpose of the writer to go into the subject of applied design at this time, for it is too broad a subject to be treated here.

The materials used in wood finishing may be classified as *paints*, which are opaque, and *stains*, *oils*, and *varnishes*, which are transparent. Paint is a substance composed of coloring matter, lead, and oil. When applied to wood, paints possess the quality of preservation. The only artistic element in paints is the color, or combination of color, which they may give. W. W. Lawrence & Co., Pittsburg, Pa., give the following color formulæ for decoration: —

Digitized by Google

Pale Tints in Oil

BUFF	White, yellow ocher, burnt sienna.
BLUE	White, Prussian blue.
CREAM	White, yellow ocher or medium chrome.
DRAB	White, burnt or raw umber (for warm or cool drab).
FAWN	White, raw Sienna, vermilion.
GRAY	White, ultramarine, lake.
GRAY	White, burnt Sienna, indigo.
GRAY	White, vegetable black, lake.
GRAY	White, Prussian blue, Indian red.
LILAC	White, vermilion, ultramarine.
LAVENDER	White, Prussian blue, lake.
PINK	White, crimson lake.
PINK	White, vermilion.
PINK	White, Indian red.
PEACH	White, vermilion, ocher, purple, brown.
SALMON	White, vermilion, ocher.
STRAW	White, chrome, yellow.
STONE	White, ocher, umber (as in drab).

Deep Tints in Oil

BROWN	White, Prussian blue, Venetian red.
BROWN	White, purple, brown, lake.
BROWN	White, indigo, ocher, vermilion.
CHOCOLATE	White, lake, vegetable black, purple, brown.
GREEN	White, ocher, indigo.
GREEN	White, Sienna, Prussian blue.
GREEN	White, yellow, chrome, Prussian blue.
LEAD COLOR	White, black.
ORANGE	White, orange, chrome, lake.
VIOLET	White, vermilion, Prussian blue, lake.

Digitized by Google

Paints consist essentially of two parts, — the *pigment*, or coloring matter, and the *vehicle*, a liquid with which the various pigments are applied. A wax may also be a vehicle in spreading color.

The pigments are varied in character. The *whites* are generally white lead, the yellows are ochers, chromate of lead, etc.; the *reds* are the red oxide of lead, ochers, oxides of iron, red oxide of copper, vermilion, carmine, etc.; the *blues* are Prussian blue, ultramarine, etc.; the *greens* are verdigris, Paris green, borate of copper, cobalt green, green lake, etc.; the *browns* are umber, bole, sepia, etc.; the *blacks* are lampblack, bone black, graphite, etc. The character of the paint is determined by the vehicle used. If oil is used as a vehicle, the paints are oil paints. If water is used, they are called water colors. When the colors are soluble, the preparation is more properly a stain, or dye. *Paints are insoluble in the vehicle and are opaque. Stains and dyes are soluble in the vehicle and are transparent.* Stains alone have no preserving effects upon woods because they do not tend to close the pores of the wood.

Linseed oil (a yellow liquid obtained from flaxseed) is used in oil paints on account of its peculiar property of oxidizing to a resinous substance when mixed with pigments and spread with a brush in thin layers over surfaces. It may be either in a raw state or boiled. The boiled linseed oil is made by boiling the raw oil with litharge and sulphate of zinc. The boiled oil dries more rapidly, is darker in color, and a little thicker than the raw oil.

Paints and stains are usually ground in raw linseed oil

Digitized by Google

and put up in tin cans or other vessels for commercial purposes. The painter mixes these for use with either raw or boiled linseed oil. To these a *thinner*, such as turpentine, is used to give the required consistency. Sometimes *driers* are added to cause the paint to harden more rapidly.

Mixing paints is an art which should not be attempted in elementary manual training work. To meet this difficulty in elementary work prepared paints should be used. But the methods employed in mixing stains are not so difficult and should be taught in elementary work.

How to prepare Stains[1]

BROWN	Burnt umber,[2] turpentine.
RED	Burnt Sienna,[3] turpentine.
GREEN	Sylvan green, turpentine.
BLACK	Drop black, turpentine.

Varnishes. — Varnishes are made from some hard gum, such as copal, rosin, etc., cut with turpentine,

[1] The colors used in preparing these stains can be bought ground in oil and put up in pound cans. Use enough color to give the desired shade. By combining colors different colors and shades may be obtained.

[2] Umber is a mineral pigment formerly obtained from Umbria in Italy, from which its name is derived. The commercial supply now comes largely from the island of Cyprus. Small quantities are also found in Pennsylvania. When raw umber is highly heated, it gives a richer and deeper brown known as burnt umber.

[3] Sienna is an ocherous earth which comes from the province of Sienna in Italy, from which its name is derived. In its natural state it is known as raw Sienna. When highly heated a richer red is obtained, known as burnt Sienna.

Digitized by Google

alcohol, or other suitable solvent. Varnishes are prepared for commercial purposes and are put up in convenient forms ranging all the way from one dollar to ten dollars per gallon.

Shellacs. — Shellac is used extensively in manual training work. It is made from lac, or gum-lac, a resinous substance which comes from the branches of several trees, the most common of which are the *Ficus religiosa* (the religious tree of the Hindus), the *Rhamnus jujuba*, and the *Croton lacciferum* (behar-tree). These trees grow in Siam, Assam, Pegu, Bengal, and Malabar. An insect (the female insect of *Coccus lacca*) punctures the bark of these trees for the purpose of depositing her eggs; the resinous substance oozes from the tree and hardens on the twigs. These twigs are broken off by the natives and dried in the sun. The dried twigs are called *stick-lac*. After the twigs have become thoroughly dry they are pounded to break the resinous substance from the twigs. The resinous substance after the twigs are removed is known as *seed-lac*. When seed-lac is melted, collected, and cooled, it is called *lump-lac*. Seed-lac is put into bags made of cotton and hung over a slow fire. When the resinous substance melts, the bag is twisted and the clean substance is allowed to flow over planks made of fig wood which are hard and smooth. The resinous substance cools on these planks, forming thin layers or scales known as *shell-lac*, or *shellac*. By passing chlorine, one of the most powerful of bleaching agents, through shellac the coloring matter is taken out, giving a substance known as *bleached shellac*, or *white shellac*.

Digitized by Google

How to Prepare Shellacs

ORANGE SHELLAC . . .	orange shellac, alcohol (wood or grain).
BLACK SHELLAC . . .	orange shellac, lampblack, alcohol.
WHITE SHELLAC . . .	bleached shellac, alcohol.

Bleached shellac should be put in alcohol as soon as possible after it is prepared. When exposed to air for a few days, it oxidizes and becomes insoluble.

Fillers. — Many woods which have an open grain, such as oak, ash, etc., require a filler. A filler, as its name suggests, is a substance which is used in filling the pores of wood. They are made from such material as whiting, plaster of Paris, starch, etc., which are mixed with oil or turpentine. The filler is applied to the wood and when dry is rubbed down with fine sandpaper. This gives a smooth surface for the paints and varnishes.

Specifications for Finishes

Soft woods (pine, basswood, etc.) in natural color:—

1. Wood perfectly clean and smooth.
2. Apply with a soft brush one coat of hard oil, varnish, or shellac, and put aside to dry.
3. Sand very lightly with No. 00 sandpaper.
4. Apply another coat of hard oil, varnish, or shellac, and put aside to dry. If necessary, apply a third coat.

Soft woods in color:—

1. Wood perfectly clean and smooth.
2. Apply one coat of stain (burnt umber, burnt

Digitized by Google

Sienna, drop black, etc.) with a brush and put aside to dry for about twenty minutes. One coat of stain should be sufficient.

3. With cotton waste or a soft cloth rub the stained surface until an even shade is produced, also see that the rubbing brings out the grain of the wood sufficiently.

4. Apply a coat of hard oil, varnish, or shellac, and put aside to dry. When this is dry, apply a second and a third coat if necessary.

Weathered oak: —

1. The wood should be perfectly clean and smooth. Some stains will raise the grain of oak. This difficulty can be overcome by moistening the surface of the wood with a damp cloth. This will raise a fine thread-like grain which can be removed by sanding lightly with No. 00 sandpaper.

2. Apply one coat of some good prepared weathered oak stain of suitable shade. There are any number of good prepared stains on the market at the present time. These prepared stains contain a filler which settles to the bottom of the can. The stain should be stirred before using until the filler dissolves. After applying the stain let it stand until dry. Some of these stains will dry in fifteen minutes, others should stand overnight to dry, or even longer.

3. When dry, rub with waste or a soft cloth until the desired shade is produced. See that the grain is brought out properly.

4. Using a soft cloth, rub with Johnson's prepared wax, or some good wax, until the desired finish is produced.

Digitized by Google

Light oak: (*a*) Dull Finish:—

1. See that the wood is perfectly clean and smooth.

2. Apply one coat of light oak stain. When dry, sand lightly with No. 00 sandpaper. If necessary, apply another thin coat of stain.

3. Apply a thin coat of shellac, either orange or white, and when dry, sand lightly with No. 00 sandpaper.

4. Apply a coat of prepared filler colored to match the stain. Let dry and apply a coat of shellac.

5. When dry sand again and apply another coat of thin shellac. If necessary, sand again and apply another coat of shellac, or some good hard oil or varnish.

6. Rub the last coat with pulverized pumice stone mixed with raw linseed oil to a thin paste. In rubbing use hair cloth, or a soft cotton cloth.

(*b*) Polished Finish:—

1. Repeat 1, 2, 3, 4, 5, and 6.

2. Apply another coat of shellac, hard oil, or varnish, and when dry rub with pulverized rotten stone and water.

3. Use a *shellac pad*. A shellac pad is made by wrapping a soft cloth around a small wad of waste. Pour a little shellac on the waste before drawing the cloth around it. In the process of rubbing the shellac should ooze through the cloth slowly. Sprinkle a little pulverized pumice stone over the surface to be rubbed. Dip the pad occasionally in boiled linseed oil. Care should be exercised not to use too much shellac. After a few trials excellent results will be obtained, giving a highly polished surface.

Practically the same process is followed in finishing other hard woods.

Digitized by Google

Polishing in the lathe: —

1. See that the wood is perfectly clean and smooth.

2. Apply boiled linseed oil with a soft cloth. Wood in motion.

3. Use the shellac pad as described above until the desired polish is secured.

Digitized by Google

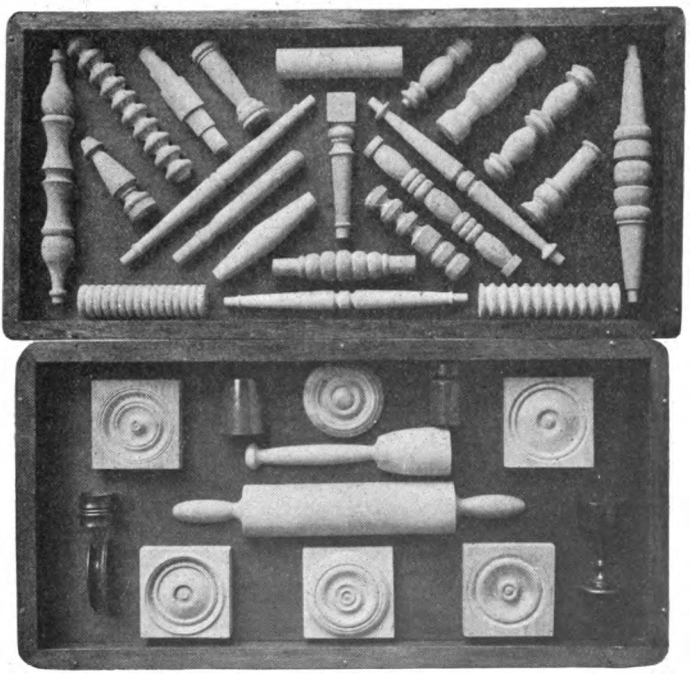

FIG. 148 *a*. — Wood-turning exercises.

Digitized by Google

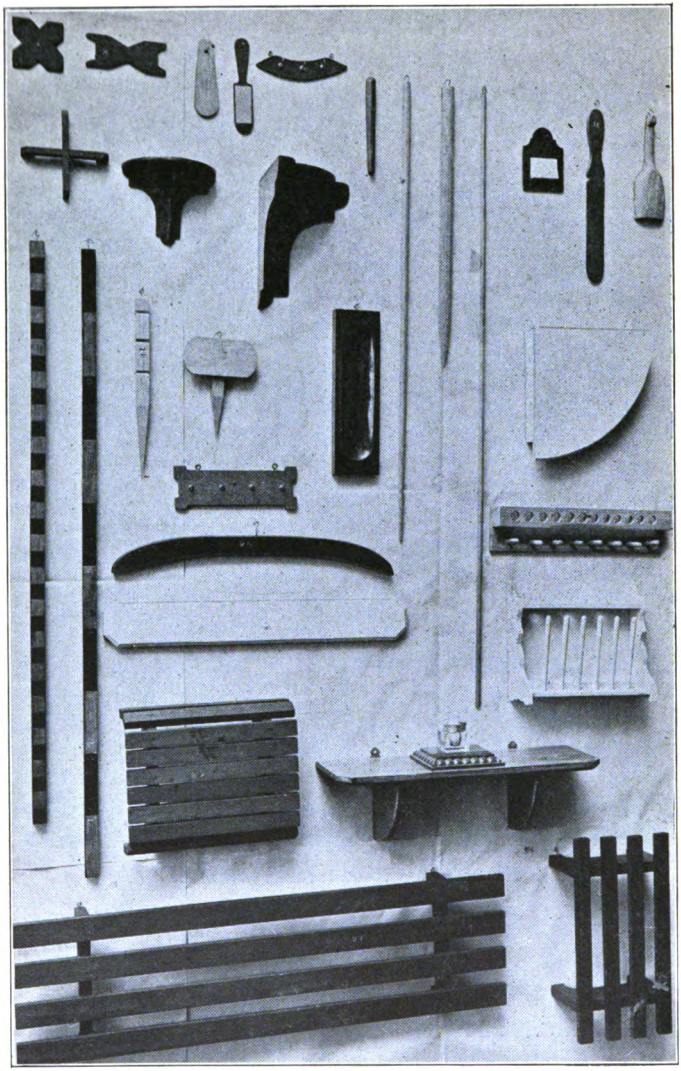

FIG. 148 *b*. — Knife work and joinery.

Digitized by Google

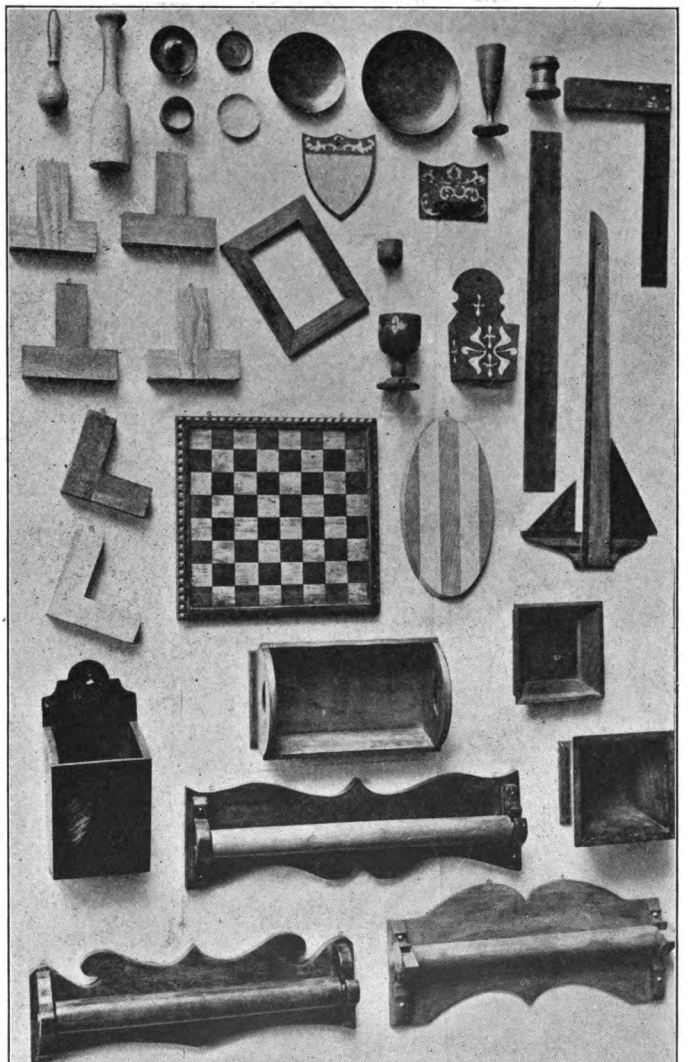

FIG. 148 *c*. — Joinery.

Digitized by Google

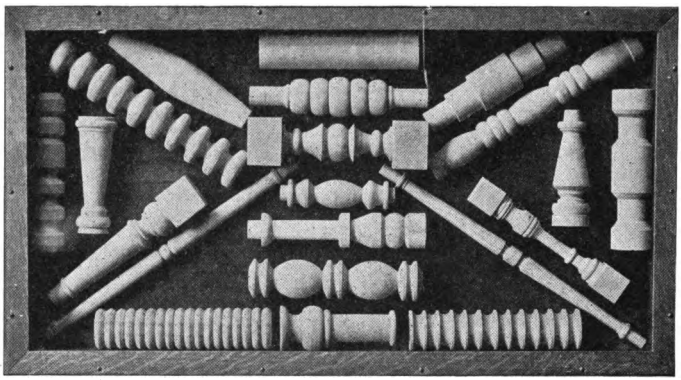

FIG. 148 *d*. — Wood-turning exercises.

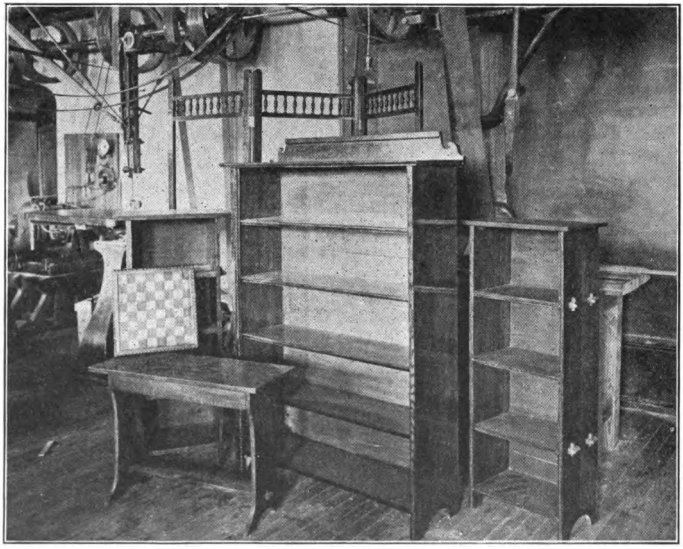

FIG. 148 *e*. — Cabinet-making exercises.

Digitized by Google

PART VI

Exercises

A. Knife Work for Schools without Shops

Tools. — Considerable work can be done in elementary woodwork in the regular schoolroom by using a whittling tray and the tools which accompany it, as shown in Fig. 149. The tray is designed for use on the desk top

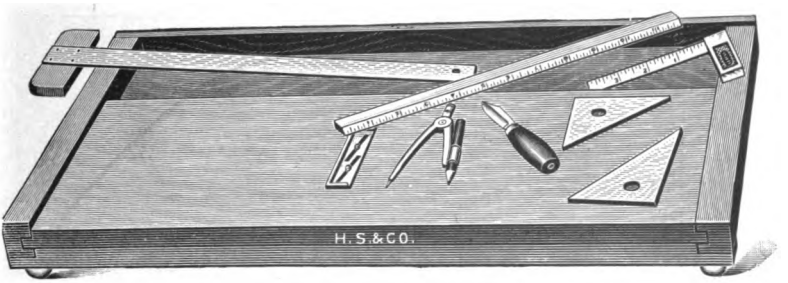

Fig. 149. — Whittling tray and tools.

and is so constructed that it will not slip or mar the desk when in use. The tools which accompany the tray are the No. 7 sloyd knife, compasses, 2 triangles, rule, T-square, and try-square. A few small hammers should be in the equipment.

Measuring and Lining (Optional)

Stock: 1 ($\frac{3}{16}'' \times 2'' \times 6''$) basswood.

The stock, or material, needed by each pupil is ex-

Digitized by Google

pressed as above. $\frac{3}{16}''$ is the thickness and should be stated first, 2″ is the width, and 6″ is the length. The figure 1 at the beginning indicates the number of blocks needed for each pupil. Basswood is the kind of wood to be used for this exercise.[1]

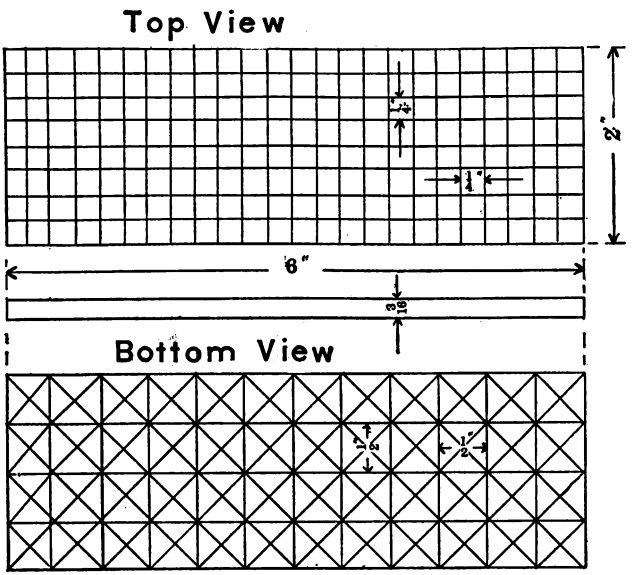

FIG. 150. — Measuring and lining.

Place the tray on the desk, as shown in Fig. 149, and put the tools in the trough of the tray to make room on the working bed. Work the exercise as follows:—

1. Place the $\frac{3}{16}'' \times 2'' \times 6''$ block on the working bed

[1] If thin wood cannot be obtained from local dealers, it can be obtained in the form of "basswood tablets" from Milton Bradley Company, Springfield, Mass., A. H. Pomeroy, Hartford, Conn., and others.

Digitized by Google

of the tray with the long way parallel to the long way of the tray.

2. With the rule and pencil lay off points 1″ apart, beginning at one end of the block. Now go back and divide each inch into halves, then divide each half into quarters. (How many quarters in 1′ ? In 6″ ? etc., etc.)

3. With try-square and pencil draw lines through these points across the face of the block. Get good lines, lines that are clean-cut and accurate.

4. Repeat 2 and 3, drawing the lines the long way of the block. The face of the block is divided into $\frac{1}{4}$″-squares.

5. In a similar way draw horizontal and vertical lines on the other side of the block. Draw the lines $\frac{1}{2}$″ apart, forming $\frac{1}{2}$″ squares.

6. Draw the diagonals of all of the squares on this side of the block.

The value of the above exercise is in learning to measure accurately and to draw lines that shall have definite meaning. Learn to use the tools correctly and with ease and rapidity. In everything that you do strive to master the best technique. Keep the block that you have used in this exercise for future use.

Match Strike (Fig. 151)

Stock: 1 ($\frac{3}{16}$″ × 5$\frac{1}{4}$″ × 6″) basswood.

Supplies: No. 1 sandpaper, stain, glue.

In the making of the match strike proceed as follows:

1. Draw center line on the block of wood parallel with the length.

Digitized by Google

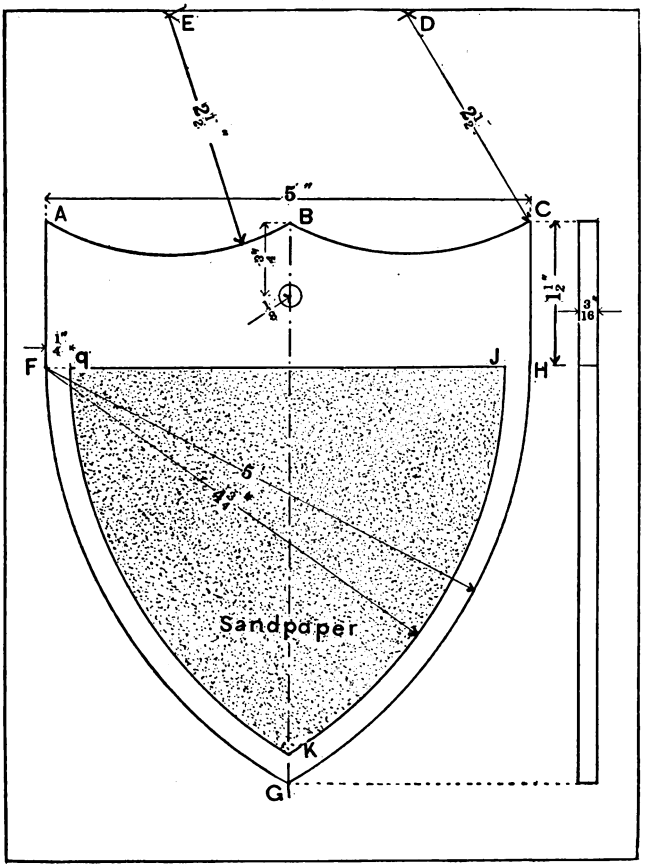

FIG. 151. — Match strike.

2. Measure from the center line to get the width ($2\frac{1}{2}$" each side of the center line) and draw lines parallel to the center line, as *CH* and *AF*.

3. From points *B* and *C* as centers, with a $2\frac{1}{2}$" radius,

Digitized by Google

draw arcs which intersect above at *D*. From point *D* as a center draw the arc *CB*. In a similar way draw arc *AB*.

4. From point *F* as a center with a radius of 5″ draw arc *HG*. From point *H* as a center, and with the same radius, draw arc *FG*. From the same centers, with a radius of $4\frac{3}{4}$″, draw arcs *JK* and *IK* which mark the curved boundaries of the sandpaper. Draw a straight line from *I* to *J*. You are now ready to do the cutting.

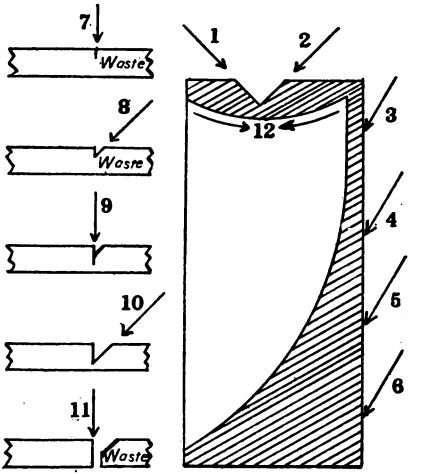

FIG. 152. — Cutting with knife.

5. Cutting (first method). The cutting is done with a sloyd knife as shown in Fig. 152. Cut in the direction of 1, Fig. 152, then in the direction of 2, finishing the cuts towards 12. Cut in the direction of 6, 5, 4, and 3. Be very careful not to split the block of wood. Get good square edges, edges that are clean-cut.

6. Cutting (second method). Follow the outline of the match strike very carefully with the point of the knife blade, making a perpendicular cut in the wood (7, Fig. 152). Repeat the cut, cutting deeper into the wood. Then make a diagonal cut, 8, and lift out the

Digitized by Google

shavings. Now make another perpendicular cut, 9, and then a diagonal cut, 10, lifting out the shavings. Make another perpendicular cut, 11, separating the waste lumber from the finished work.

7. After all the cutting is done sand the edges and surfaces a little, if it is necessary, with No. 00 sandpaper. Divide a sheet of sandpaper into four equal parts. Fold one of these pieces around a block, known as a sand block, so that the rough surface of the sandpaper is without. The sand block should be about $\frac{7}{8}'' \times 3'' \times 4''$. Sand back and forth parallel with the grain of the wood. Be very careful not to round the corners and edges. Sandpaper should never be used in doing work that can be done with a cutting tool.

8. Stain the block with burnt umber stain, covering all except the part which is to be covered with sandpaper. Apply the stain evenly with a brush. Let stand for fifteen minutes to dry. Rub with waste or a soft cloth. This will bring out the grain of the wood and will help to give a smooth surface. Apply a thin coat of hard oil evenly with a brush. Let stand over night to dry, then apply a second coat if necessary to give a good finish.

9. Bore hole used in hanging the match strike to the wall. In doing this be very careful not to split the block.

10. Cut out a piece of No. 1 sandpaper to the desired shape, apply a thin coat of glue to the back of the sandpaper, and glue in place. Clamp between blocks overnight until glue hardens. Remove the clamps, and the match strike is completed.

Digitized by Google

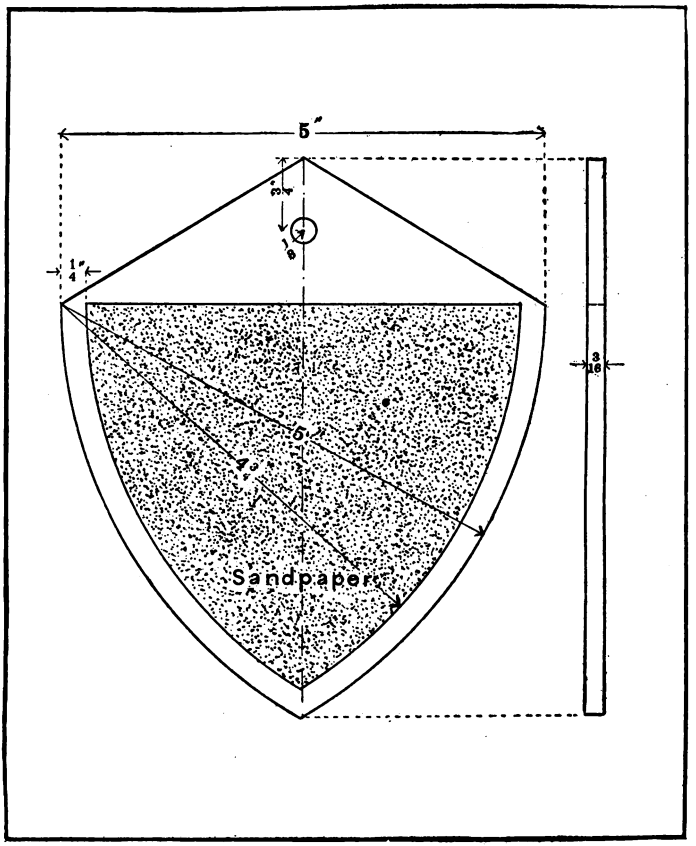

Fig. 153. — Match strike.

Another design for a match strike is shown in Fig. 153. This is made similar to the one shown above. The teacher and pupils together may work out different designs. Wherever possible, it is advisable to encourage work in original designing.

Digitized by Google

Match Box (Fig. 154)

Stock: see Fig. 154.

Supplies: No. 1 sandpaper, burnt umber stain, hard oil, glue, ½″ 20 steel wire brads (½″ length, 20 size of wire).

In making the match box proceed as follows:—

Directions for Back:—

1. Draw center line parallel with the long way of the block.

2. From the center line lay off points on either side near the top and bottom. Draw straight lines through the two points on either side of the center line, forming the side lines of the back.

3. With compasses set at ½″ radius draw around the right and left corners of the top.

4. With sloyd knife cut to lines, as shown in Fig. 152, and sand. Bore a ¼″ hole which is used in hanging the match box to the wall. Bore through the wood until the point of the bit pricks through the wood, then turn the block and bore through to meet the cut already made. Get a clean-cut hole without tearing the wood.

Directions for Sides:—

5. Lay off the lines for the sides as shown in Fig. 154.

6. Cut to these lines and sand.

Directions for Front and Bottom of Box:—

7. Lay off lines which will give the correct measurements for the front and bottom, as shown in Fig. 154.

8. Cut to these lines and sand.

Digitized by Google

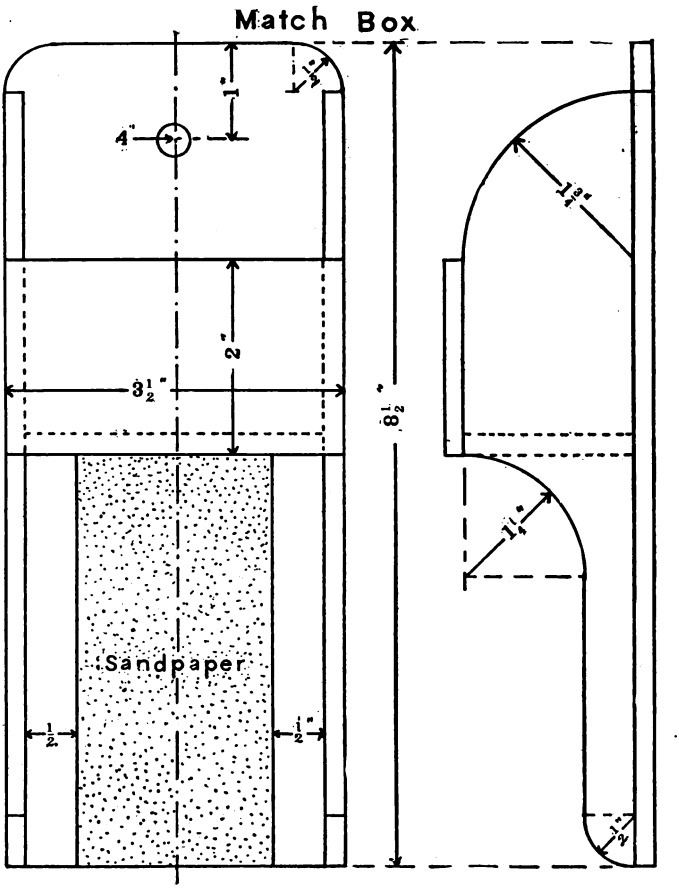

FIG. 154. — Match box.

Directions for putting Parts together: —

9. The back is nailed to the sides and bottom, the ends to the bottom, and the front to the ends and top. Use ½″ 20 steel wire brads. With compasses set at ¾″

Digitized by Google

step off points along the edges where the brads are to be driven. Do not drive the brads too near the corners, for the wood will split. Nail the parts together. In doing this do not mar the wood with the hammer. Drive the heads of the brads flush with the surface of the wood, then, with a fine nail set, set the heads of the brads just a little below the surface of the wood.

Directions for Finishing:—

10. Stain with burnt umber stain, use hard oil, and glue sandpaper in place.

Whisk Broom Holder (Fig. 155)

Stock: See Fig. 155.

Supplies: ½″ 20 steel wire brads, No. 00 sandpaper, burnt Sienna stain, hard oil, varnish, or shellac.

In the construction of the whisk broom holder proceed as follows:—

Directions for Back:—

1. Lay off center line parallel with the length of the back. From center line lay off the other necessary construction lines as shown in the drawing.

2. With sloyd knife cut to these lines.

Directions for Front and Sides:—

3. In a similar way lay off and cut out the front.

4. Cut the sides to the desired length and angle, as shown in the drawing.

Directions for putting Parts together:—

5. The back and front are nailed to the sides with ½″ 20 steel wire brads. The brads are to be driven three

Digitized by Google

quarters of an inch apart and the heads are to be set a little below the surface of the wood.

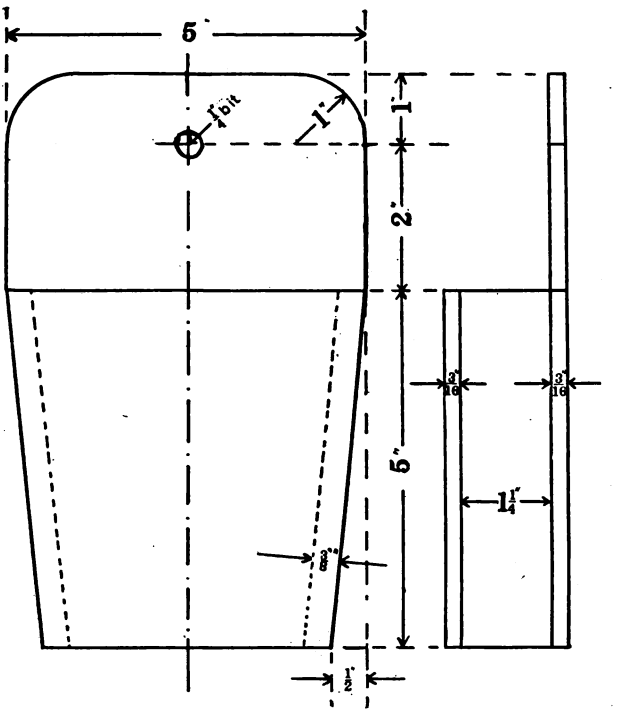

FIG. 155. — Whisk broom holder.

Finishing: —

6. After sanding the whisk broom holder it is to be stained with burnt Sienna stain, and then given one or two coats of hard oil as required. Give much attention to good finishing. A model that has been well made may often be spoiled by poor finishing.

Digitized by Google

B. Bench Work

The foregoing exercises may be taken up in schools with shops if they have not been made by pupils. There is a certain value in them which should not be overlooked. They require little material and are therefore economical.

Shelf (Fig. 156)

Stock: 2 ($\frac{3}{8}$″ × 7$\frac{1}{8}$″ × 24″), 2 ($\frac{7}{8}$″ × 6″ × 6″), basswood.
Supplies: No. 1 sandpaper, 1″ 16 steel wire brads.

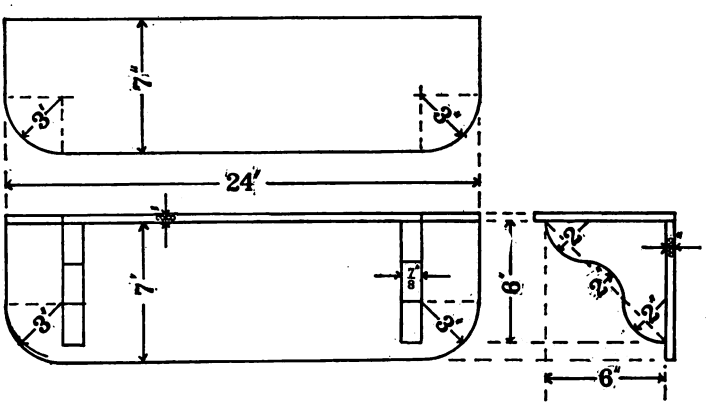

Fig. 156. — Shelf.

In the construction of the shelf proceed as follows:—

1. With plane reduce the stock to the desired measurements, as shown in Fig. 156.
2. Lay off lines for curves as shown in drawing.
3. With bracket saw or scroll saw, saw to these lines.

Digitized by Google

4. If curves are ragged, use a wood rasp, then sandpaper. Keep the edges square. Do not round the corners in sanding.

5. With compasses set at two inches step off points where the nails are to be driven. See that the nails do not come too near the ends of the wood, causing it to split.

6. Nail the parts together. The back is first nailed to the brackets, then the top is nailed to the back and brackets.

7. Set the heads of the nails a little below the surface of the wood.

8. Stain and use hard oil, as in the previous exercises.

Coat Hanger (Fig. 157)

Stock: 1 ($\frac{7}{8}'' \times 3'' \times 16''$) basswood or pine.
Supplies: sandpaper, screw hook.

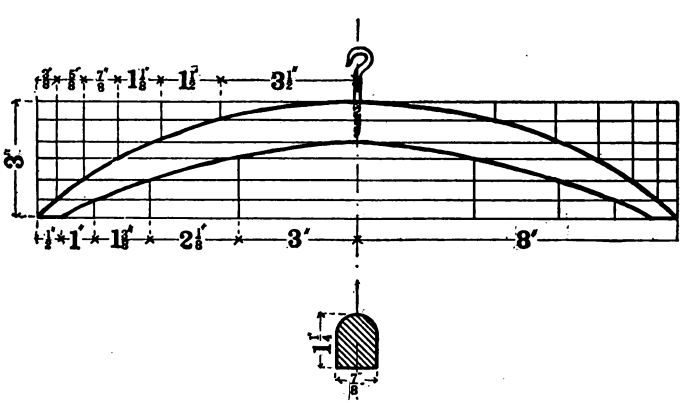

FIG. 157. — Coat hanger.

Digitized by Google

In making the coat hanger proceed as follows:—

1. Lay off the work according to the drawing.
2. With bracket saw or spokeshave cut to these lines.
3. With spokeshave round the top corners.
4. Clean with sandpaper.
5. Apply one or two coats of hard oil, varnish, or shellac.

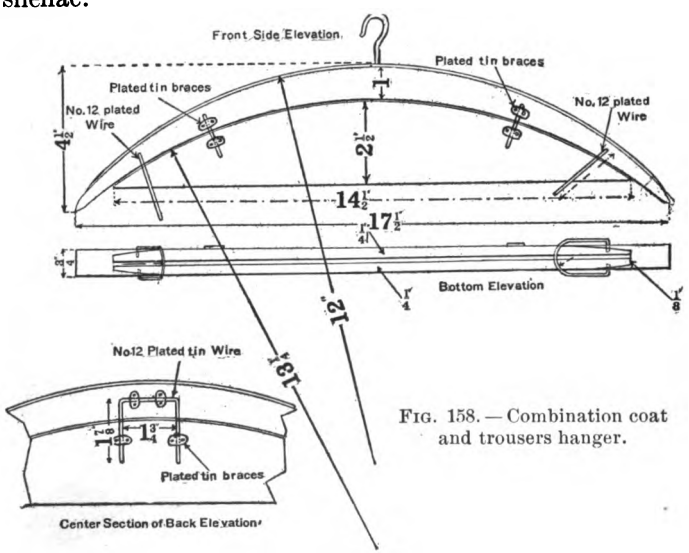

FIG. 158. — Combination coat and trousers hanger.

Combination Coat and Trousers Hanger (Fig. 158)

Stock: 1 ($\frac{3}{4}$″ × 4½″ × 17½″) maple, 2 ($\frac{1}{4}$″ × 4¾″ × 15″) maple.

Supplies: sandpaper, No. 12 plated wire, tin for braces, brass nails to fasten braces, screw hook.

In making the combination coat and pants hanger, proceed as in last exercise, with the addition of the wire

Digitized by Google

and tin work. One of the flaps is movable upon a wire hinge (see back elevation) and the other is stationary, being held in place by wire braces (see front elevation). The ends of the flaps are beveled so that when the pants are placed between them the braces (see front and bottom elevations) slide over the ends and press them closely together.

Bread-cutting Board (Fig. 159)

Stock: 3 ($\frac{7}{8}'' \times 1\frac{1}{2}'' \times 14''$) cherry, 2 ($\frac{7}{8}'' \times 1\frac{1}{2}'' \times 14''$) basswood.

Supplies: sandpaper, glue.

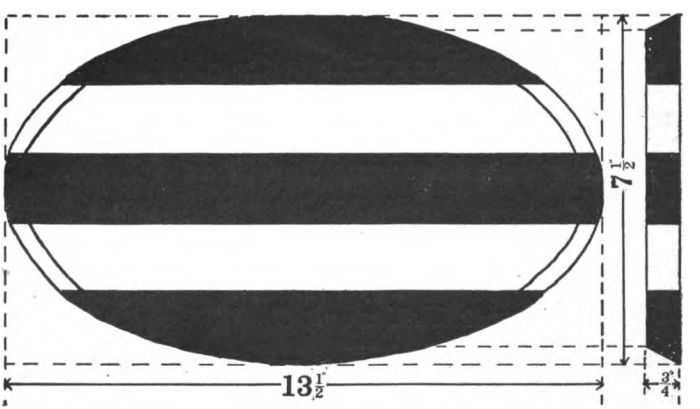

Fig. 159. — Bread-cutting board (cherry and basswood).

In making the bread-cutting board, proceed as follows:

1. Use three cherry strips and two basswood strips, as indicated in the drawing.

2. Plane the edges of each strip a very little and fit together for gluing.

Digitized by Google

3. Determine the direction of the grain of each piece on the face and make arrow indicating the direction of the grain.

4. Arrange the pieces as they are to be glued together, so that the grain of the pieces runs in the same direction, and number these pieces 1, 2, etc.

5. Glue pieces together. Scrape off surplus glue before it hardens.

6. Allow pieces to remain in the clamps overnight while the glue hardens.

7. Remove the clamps and dress the top and bottom surfaces to the desired thickness.

8. Lay off ellipse by the trammel method as shown on page 290.

9. Tilt the scroll saw table to the desired angle and saw out the ellipse form.

10. Smooth the edges with wood rasp and sandpaper.

11. Bore the nail hole near the top so that the bread-cutting board can be hung up, when not in use.

12. Use no finish of any kind on this project. Why?

Toothbrush Holder and Shelf (Fig. 160)

Stock: 1 ($\frac{3}{8}$″ × 7$\frac{1}{8}$″ × 14″), 1 ($\frac{3}{8}$″ × 3$\frac{1}{8}$″ × 14″), 2 ($\frac{5}{8}$″ × 2$\frac{3}{8}$″ × 7″), 1 ($\frac{5}{8}$″ × 1$\frac{5}{8}$″ × 9$\frac{3}{4}$″), basswood.

Supplies: sandpaper, 1″ 16 steel wire brads.

In making the toothbrush holder and shelf, proceed as follows:—

1. Dress the stock to the desired measurements.
2. Lay off the different parts according to the drawing.
3. Cut curves with bracket saw or scroll saw.

Digitized by Google

4. In cutting the pockets for the brushes (see Section AB) bore a $\frac{1}{4}''$ hole at the back to form the semicircle, then cut to the sides of this hole with back saw.

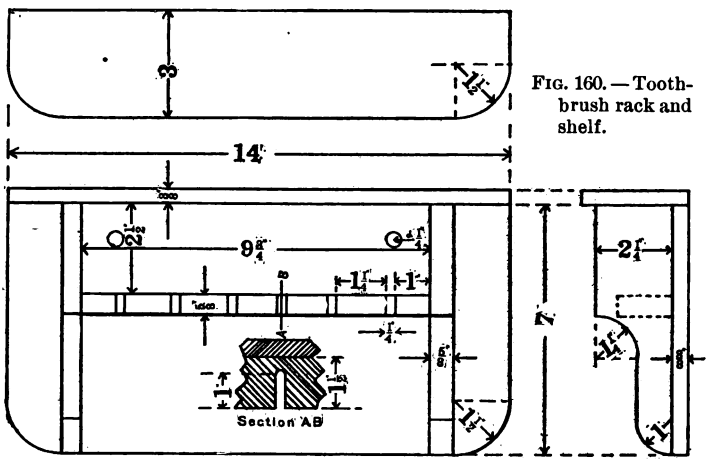

FIG. 160. — Toothbrush rack and shelf.

5. In fastening parts together, nail the brackets to the toothbrush holder. Nail the back to the brackets and to the holder. Nail the top to the brackets and to the back.

6. Set the heads of the nails a little below the surface of the wood, using a nail set.

7. Clean with sandpaper and finish as desired (see page 155).

Towel Rollers (Figs. 161 and 162)

Directions

Stock: 2 ($\frac{7}{8}'' \times 1\frac{1}{2}'' \times 26''$), long pieces for back; 1 ($\frac{7}{8}'' \times 3\frac{3}{4}'' \times 12''$), cross pieces for back; 1 ($\frac{7}{8}'' \times 2\frac{3}{4}'' \times 12''$), Brackets; 1 ($\frac{7}{8}'' \times 1\frac{3}{4}'' \times 19''$), Roller. White Pine.

Digitized by Google

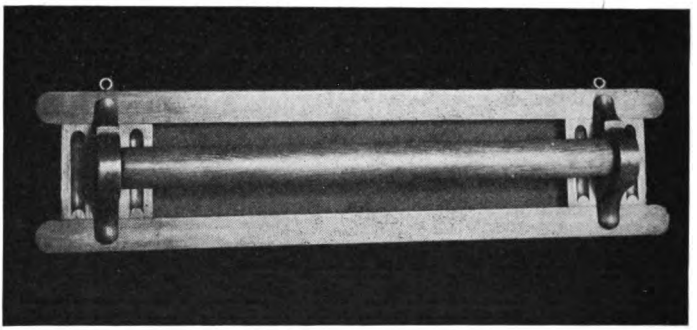

FIG. 161.—Towel roller.

1. Get out the stock with cross-cut and rip saw.

2. Plane the face and edge of each of the long pieces (*a*) square with each other, and reduce to dimensions, using the jack plane.

3. Reduce cross pieces (*b*) and brackets (*c*) to dimensions in the same way.

4. Square up the ends of cross pieces (*b*) to dimension, using back saw.

5. Smooth the ends with the block plane.

6. Lay out the ends of the long pieces (*a*) with the dividers.

7. Lay out the joints on the long pieces (*a*) and cross pieces (*b*) with try-square, knife, and gauge; and remove the stock with back saw and chisel.

8. Saw off the ends of long pieces (*a*) with back saw and form same with chisel and file.

9. Smooth plane the front and back sides, and screw together.

10. Lay out the position of the grooves and brackets and carve the grooves with the gouge.

Digitized by Google

11. Lay out the brackets with try-square and dividers and get same out on scroll saw, smooth with chisel and form with knife.

12. Bore holes with auger bit and make groove for roller with back saw and chisel.

13. Screw brackets in place.

14. Reduce roller (*d*) to $1\frac{1}{2}''$ square as in (2).

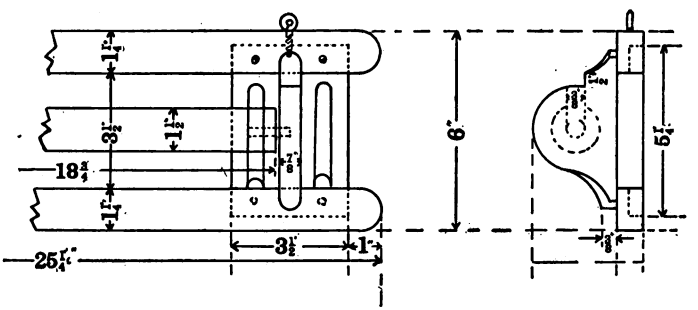

FIG. 162. — Towel roller.

15. Square up the ends of roller to dimension, using back saw.

16. Draw the diagonals on each end and from the centers thus obtained describe with the dividers $1\frac{1}{2}''$ circles within the squares.

17. Plane off the corners with the hack plane, making the piece octagonal. Plane off the corners again, making it sixteen-sided.

18. Finish to a cylinder with the smoothing plane.

19. Smooth with file and sand paper.

20. Bore holes with auger bit and glue in dowels.

21. Fix in screw eyes.

Digitized by Google

Exercises

Cross-cut and rip sawing, face planing, edge planing, squaring, gauging, sawing with back saw, planing with block plane, perpendicular chiseling, oblique chiseling, filing, smooth planing, perpendicular gouging, oblique gouging, scroll sawing, modeling with knife, boring with brace and auger bit, chamfer planing, modeling with smoothing plane, gluing, putting in screws, using gimlet bit and countersink, putting in screw eyes.

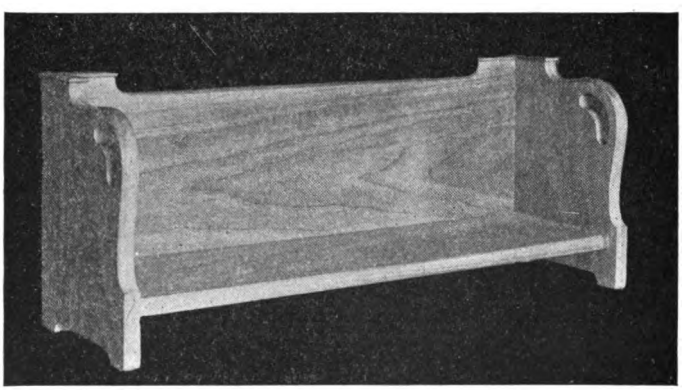

FIG. 163. — Book rack.

Book Rack (Figs. 163 and 164)

Directions

Stock: $\frac{3}{4}''$ oak.

1. Get out the several parts with cross-cut and rip saw, the two ends in one piece.

2. Reduce each piece to dimensions, using the jack plane.

Digitized by Google

3. Measure the length of the end pieces and square up to dimensions, using the back saw.

4. Smooth the ends with the block plane.

5. Lay out the position of the grooves with rule, try-square, knife, bevel, and gauge.

6. Cut out the grooves with back saw and chisel.

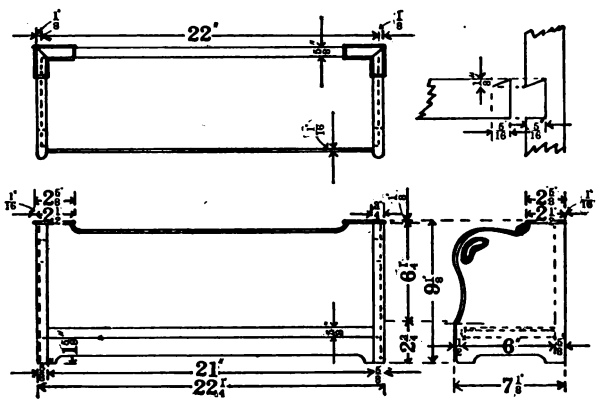

FIG. 164. — Book rack. (Pupils are to make original designs for back and sides.)

7. Square up the ends of the shelf to dimensions with back saw and block plane.

8. Fit the shelf into the grooves with back saw and chisel.

9. Make the grooving for the back with the plow or rabbet plane.

10. Square up the back to dimensions and fit in position with block plane.

11. Design the ends and back and shape with scroll saw, spokeshave, knife, and file.

Digitized by Google

12. Smooth all pieces with sandpaper and glue together.

13. Make miter joints on the top corners with miter box and tack in position.

Exercises

Cross-cut and rip sawing, face planing, edge planing, squaring, gauging, back sawing, block planing, perpendicular chiseling, rabbet planing, scroll sawing, smoothing with spokeshave, concave filing, smoothing with sandpaper, gluing, and sawing in miter-box.

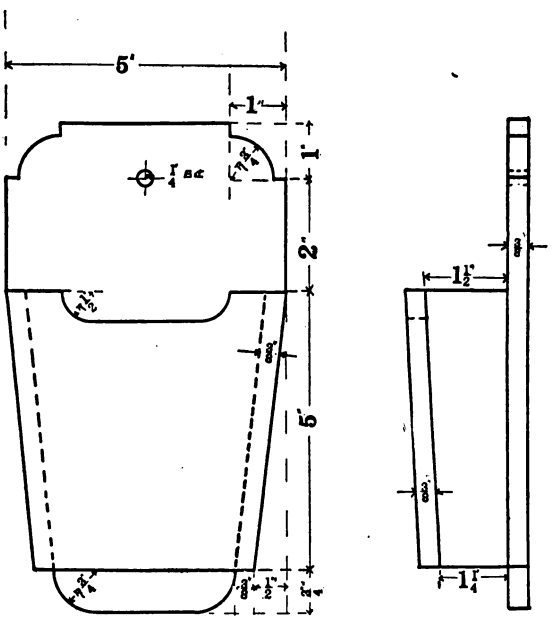

FIG. 165. — Whisk broom holder.

Digitized by Google

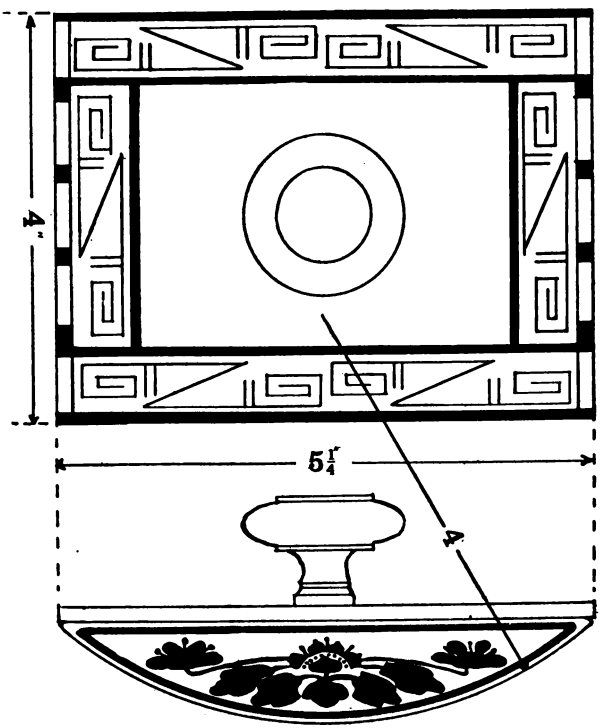

FIG. 166. — Blotter pad.

Digitized by Google

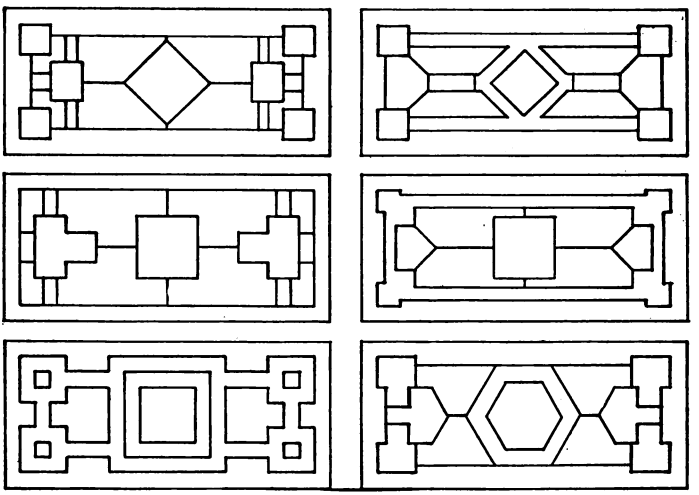

FIG. 167. — Decorations for top of blotter.

Digitized by Google

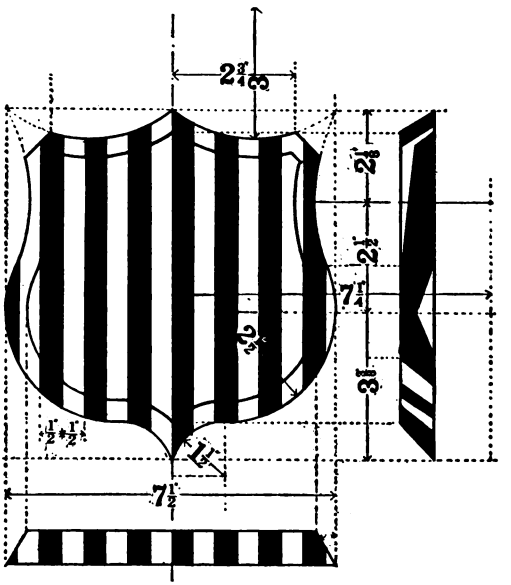

FIG. 168. — Key rack. (Use six ¾″ screw hooks on which to hang keys.)

Digitized by Google

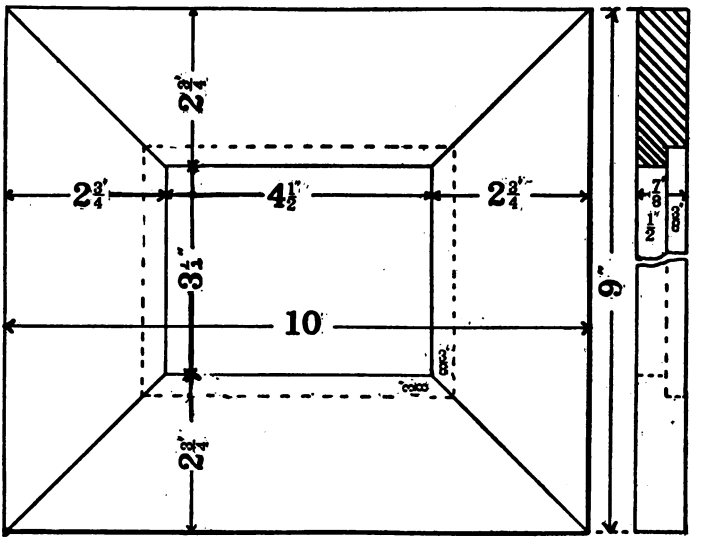

FIG. 169. — Picture frame.

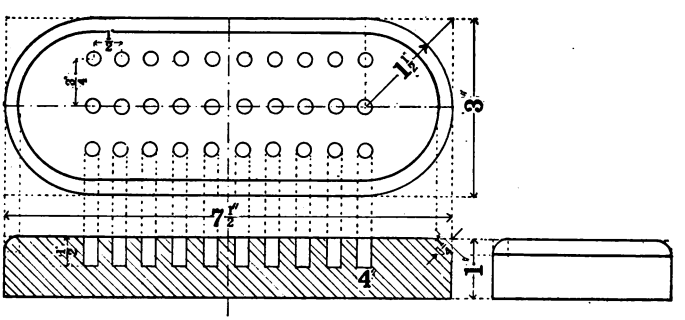

FIG. 170. — Counting board.

Digitized by Google

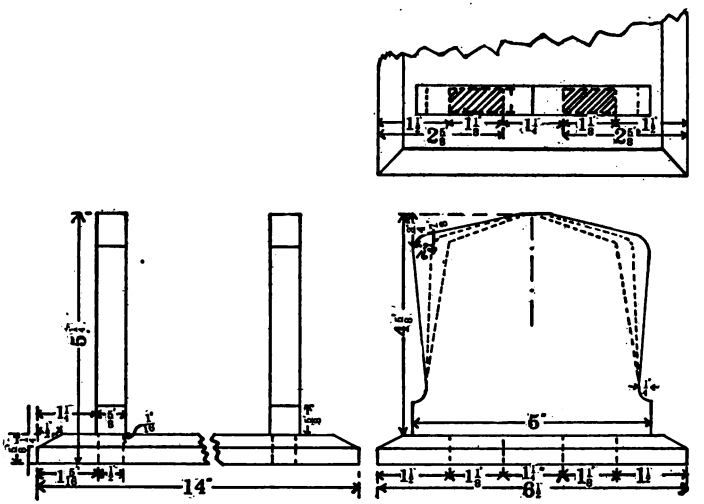

FIG. 171. — Book rack.

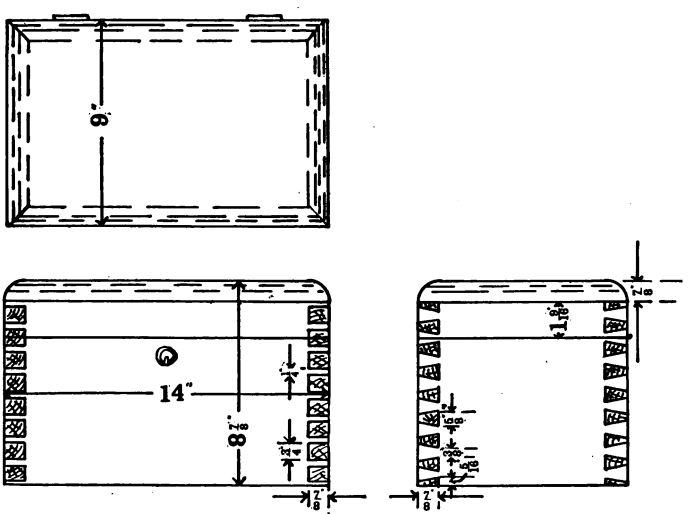

FIG. 172. — Dovetail box.

Digitized by Google

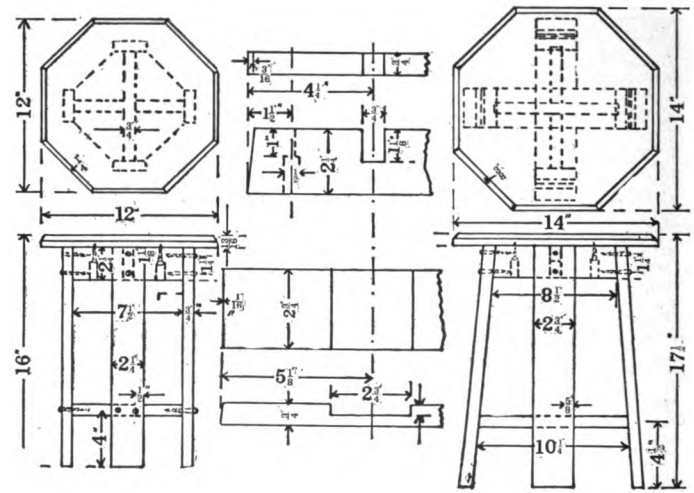

FIG. 173. — Tabourets.

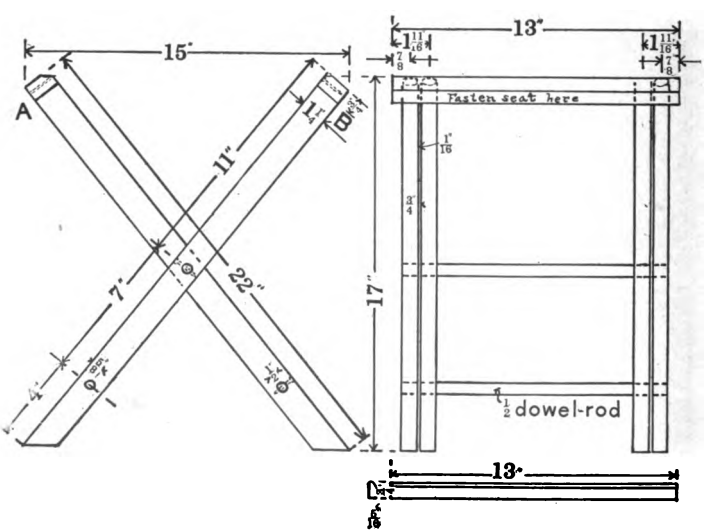

FIG. 174. — Camp stool. (The seat is to be made of leather, carpet, or canvas.)

Digitized by Google

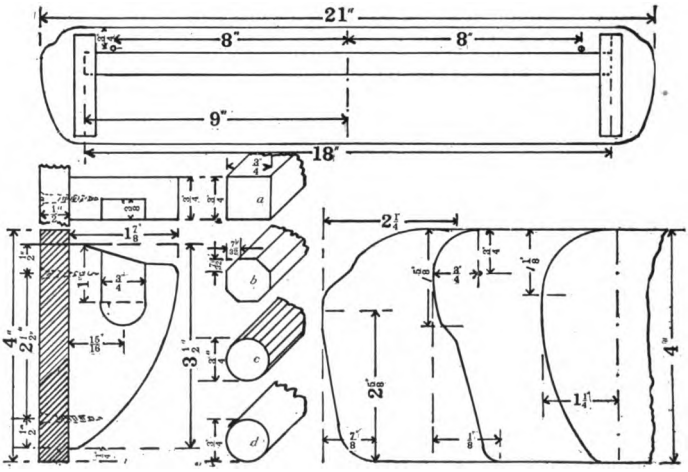

FIG. 175. — Towel rack. (Pupils should design outlines of back and brackets.)

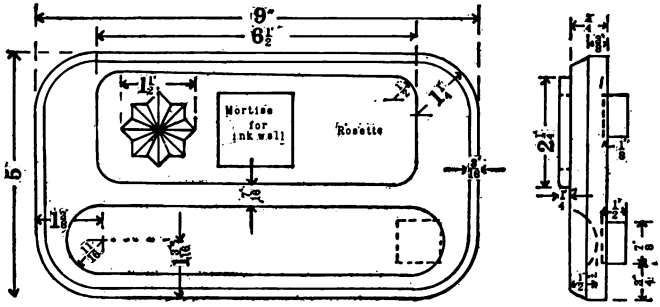

FIG. 176. — Inkstand.

Digitized by Google

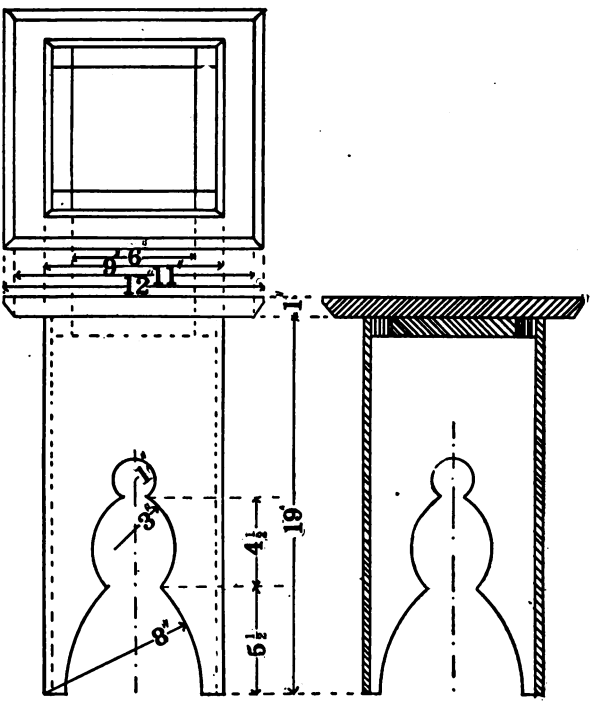

FIG. 177. — Tabouret.

Digitized by Google

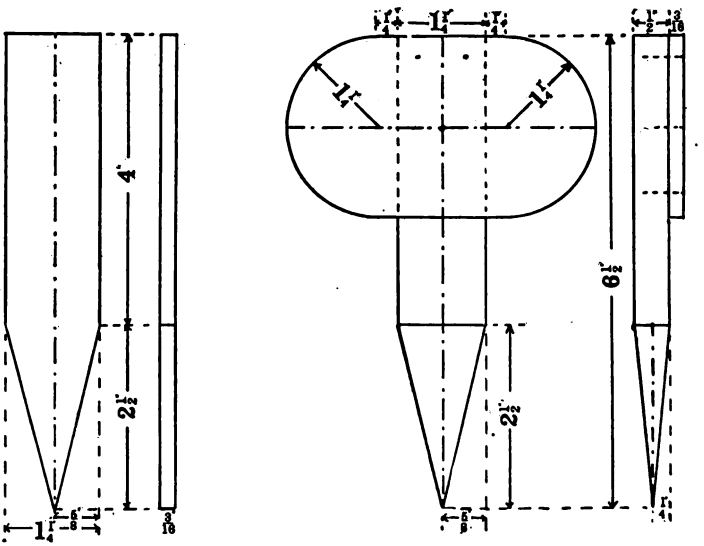

FIG. 178. — Plant marker and bed marker.

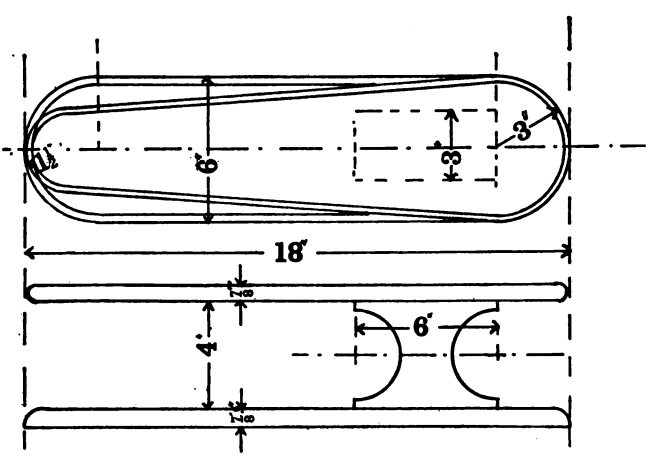

FIG. 179. — Sleeve board.

Digitized by Google

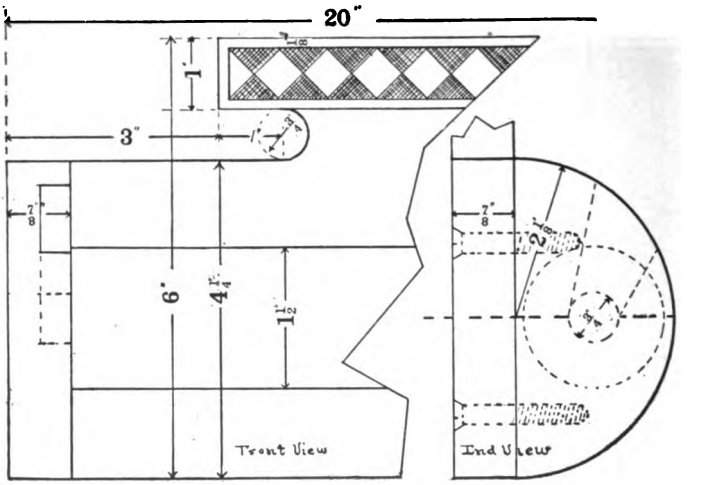

FIG. 180. — Towel roller.

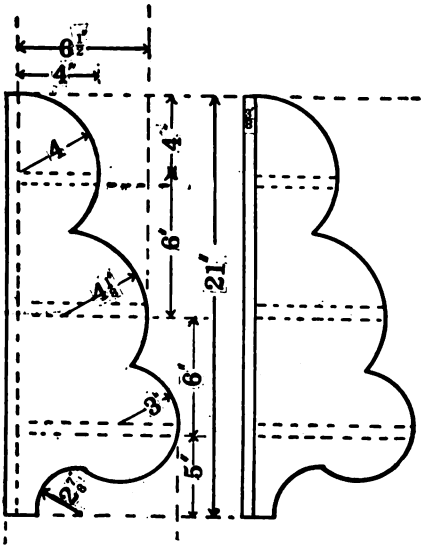

FIG. 181. — Corner shelf.

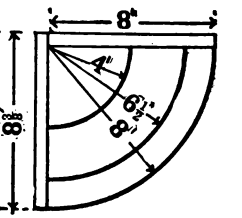

Digitized by Google

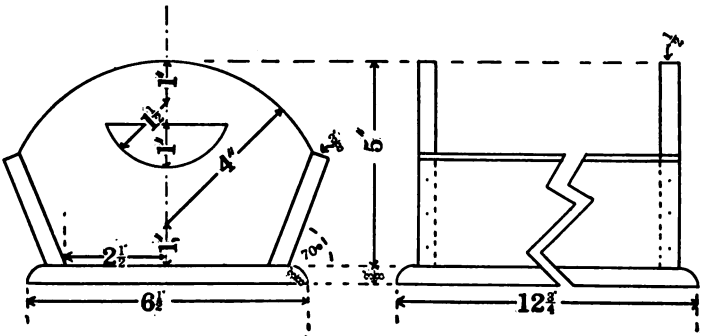

FIG. 182.—Knife box.

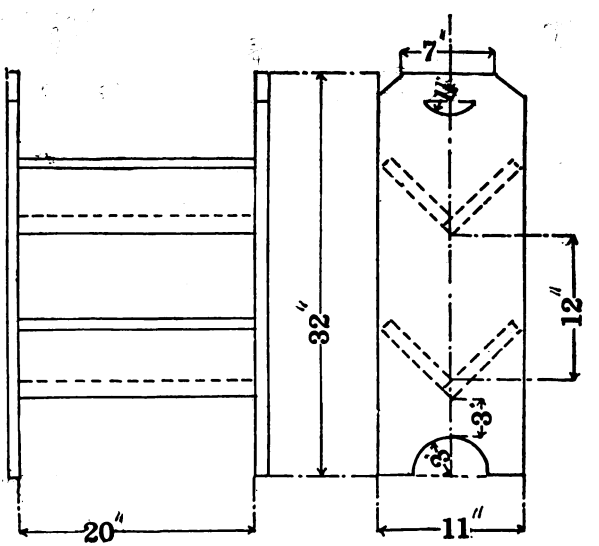

FIG. 183.—Book rack.

Digitized by Google

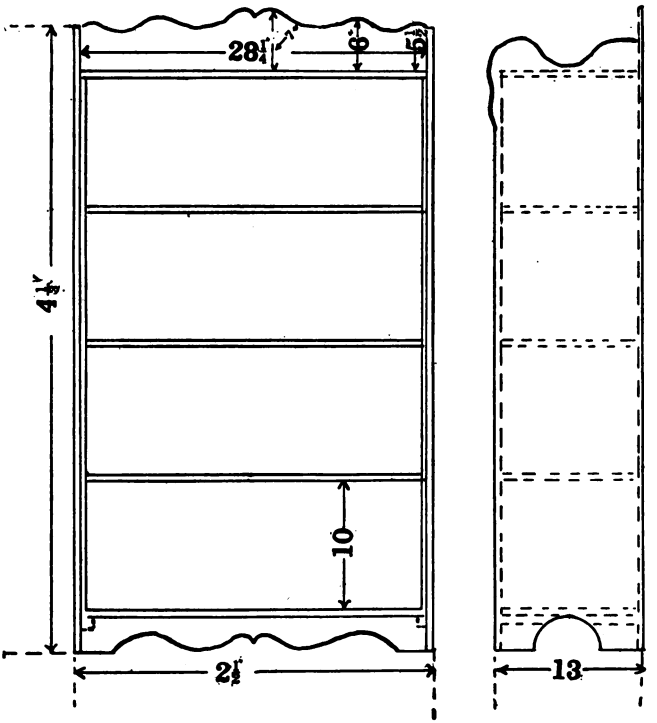

FIG. 184. — Bookcase.

Digitized by Google

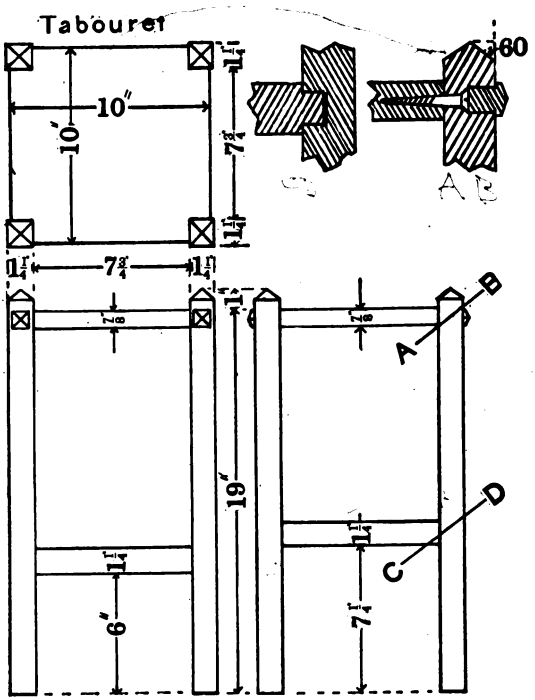

FIG. 185. — Oak tabouret.

Digitized by Google

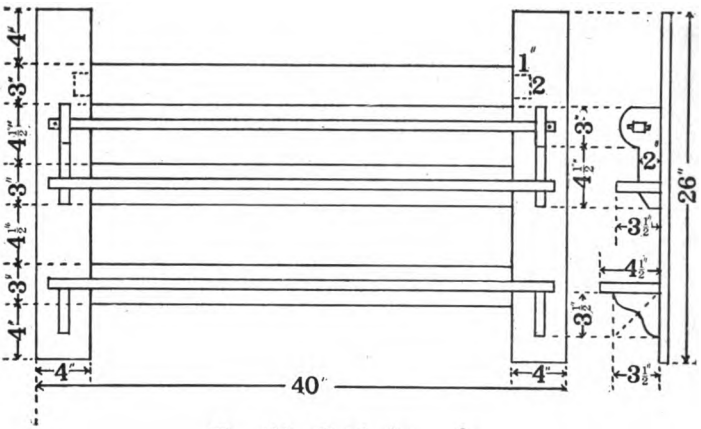

FIG. 186. — Dutch plate rack.

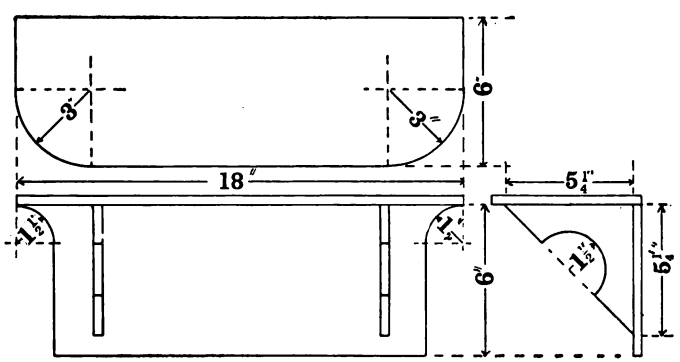

FIG. 187. — Mantel shelf.

Digitized by Google

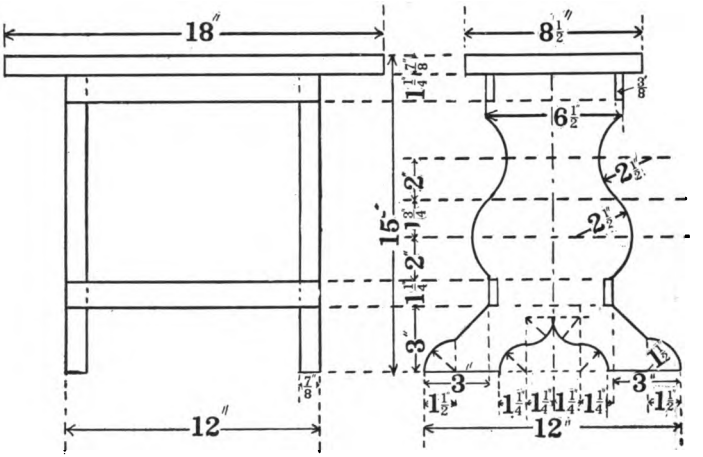

FIG. 188. — Footstool.

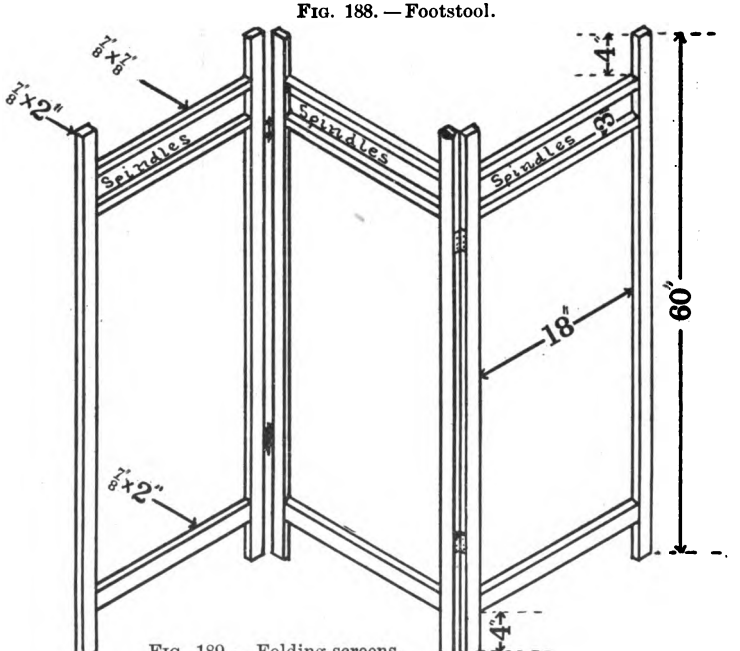

FIG. 189. — Folding screens.

Digitized by Google

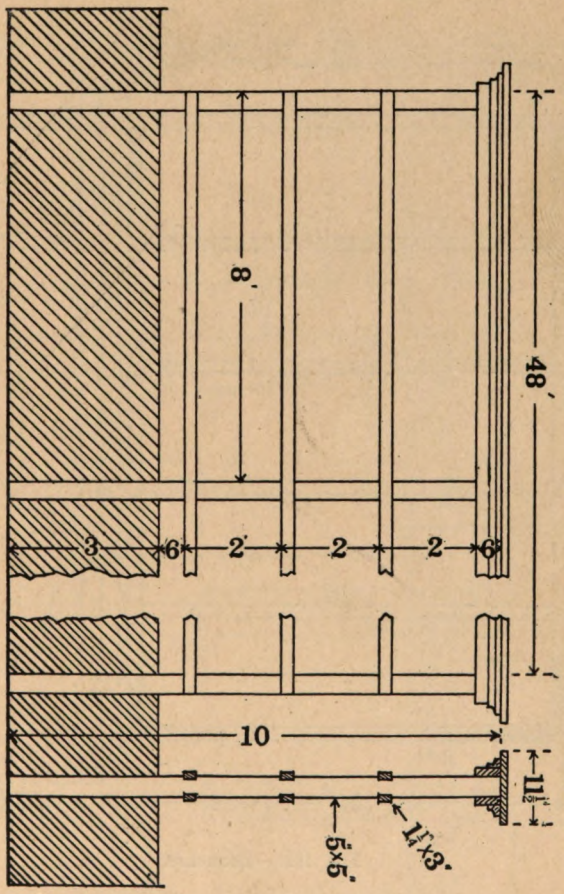

FIG. 191. — Sweet-pea rack. ("Communal" model.)

Digitized by Google

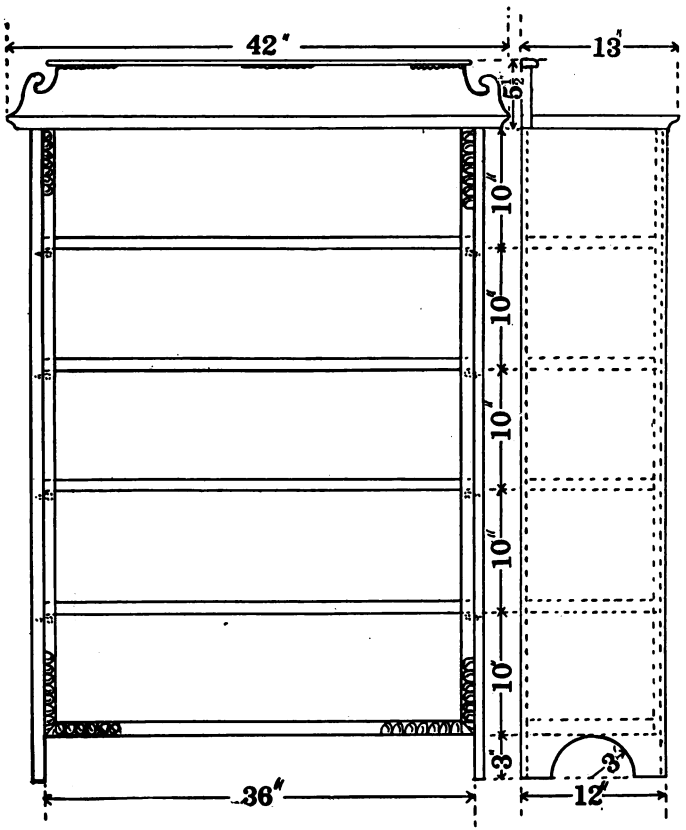

FIG. 192. — Bookcase.

Digitized by Google

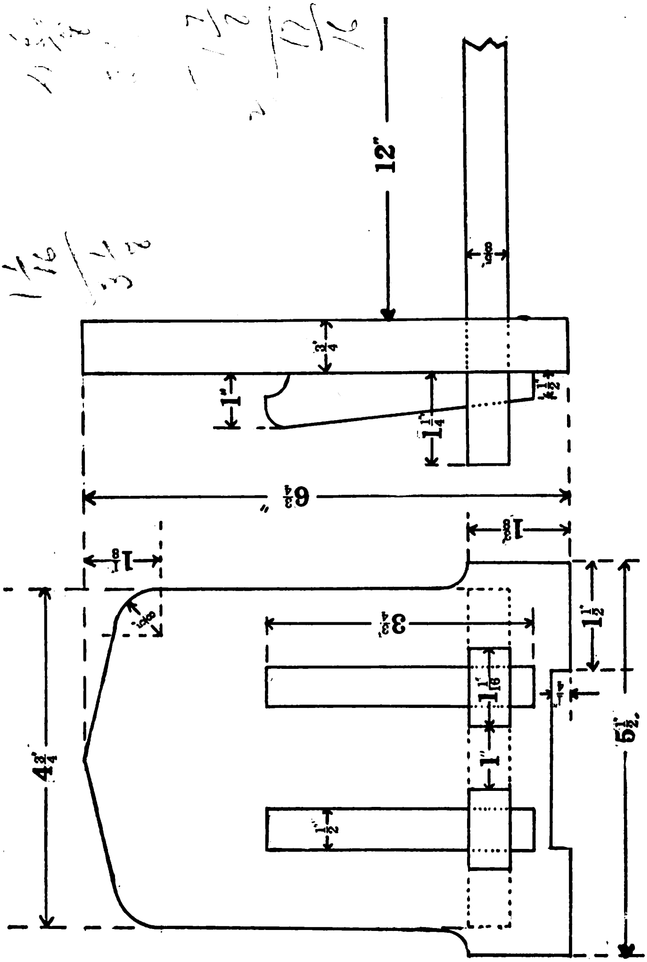

FIG. 193. — Book rack.

Digitized by Google

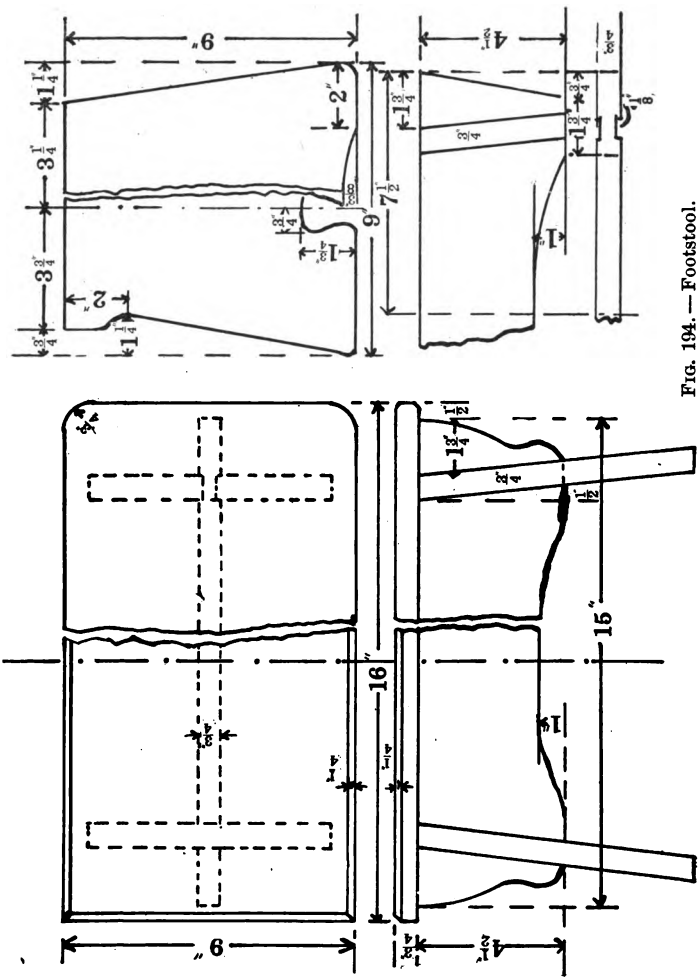

FIG. 194. — Footstool.

Digitized by Google

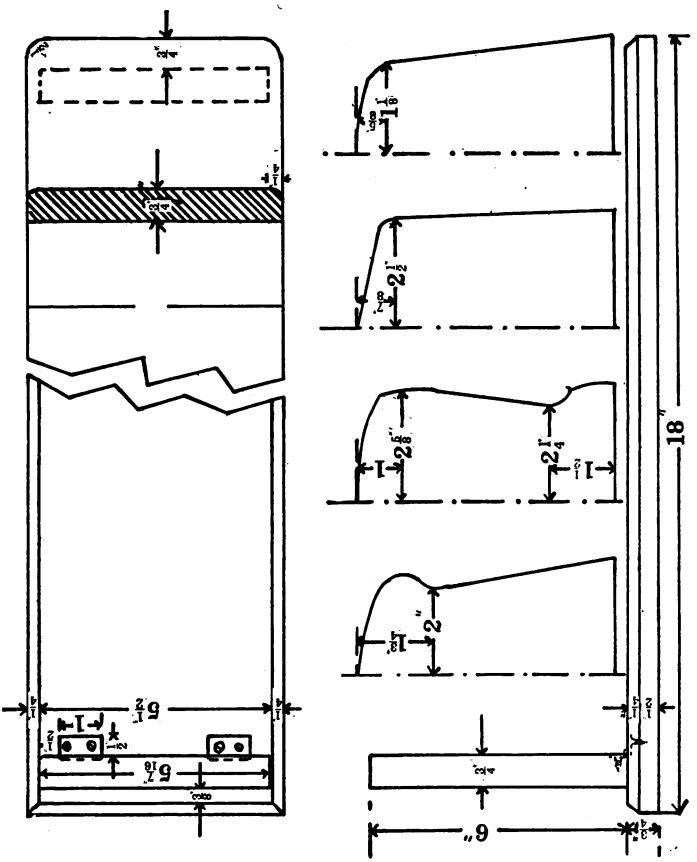

FIG. 135. — Book rack. (Outline of ends to be selected or designed by pupils.)

Digitized by Google

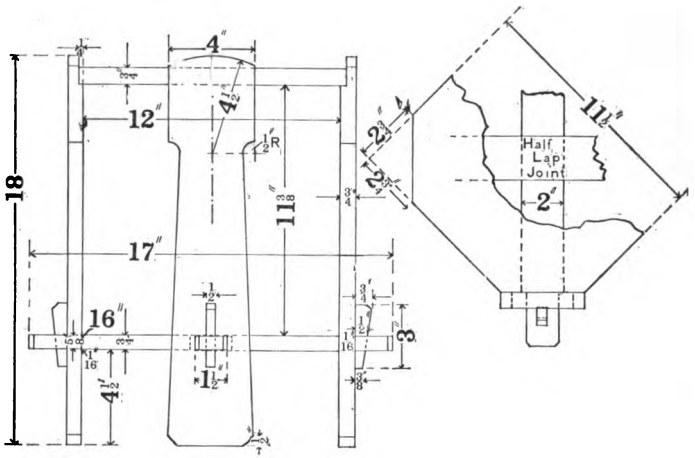

FIG. 196. — Jardinière stand.

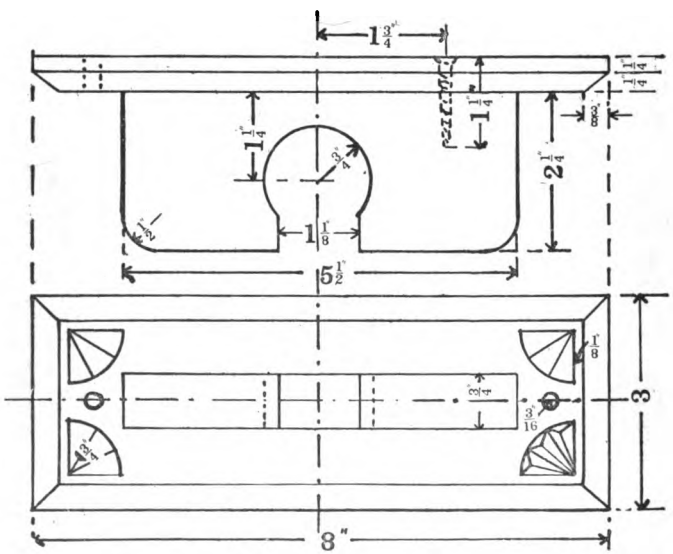

FIG. 197. — Floor broom holder.

Digitized by Google

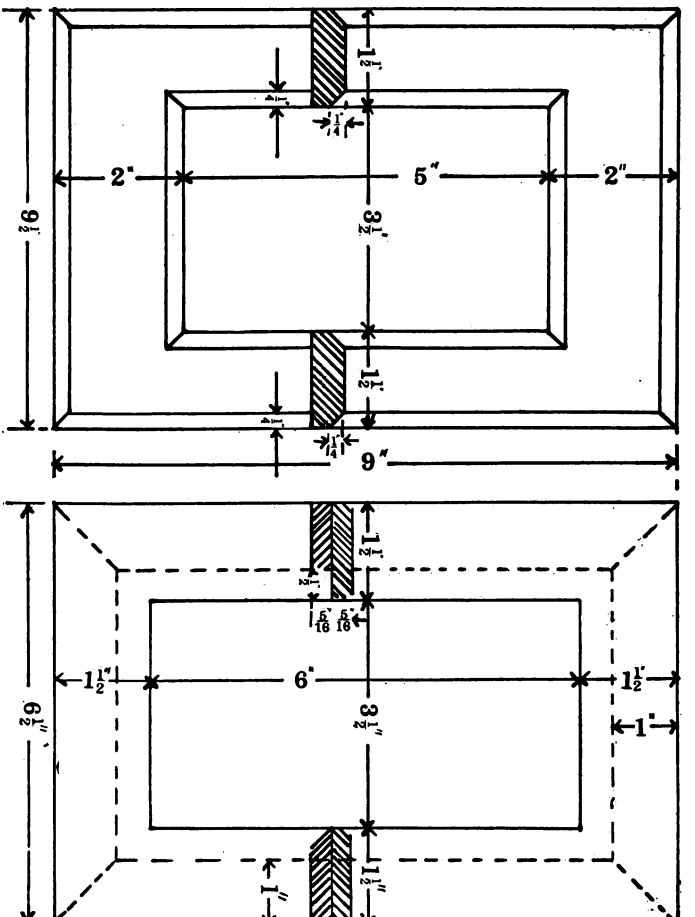

FIG. 198. — Picture frames.

Digitized by Google

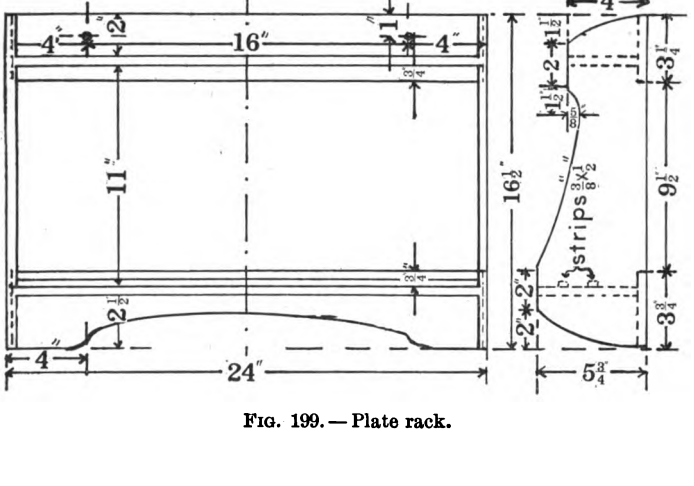

FIG. 199. — Plate rack.

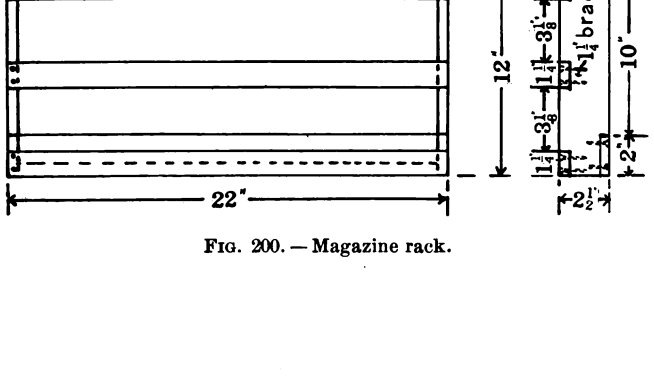

FIG. 200. — Magazine rack.

Digitized by Google

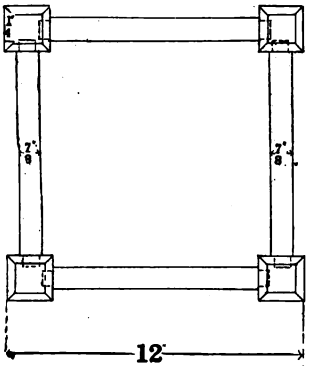

FIG. 201.—Umbrella rack.

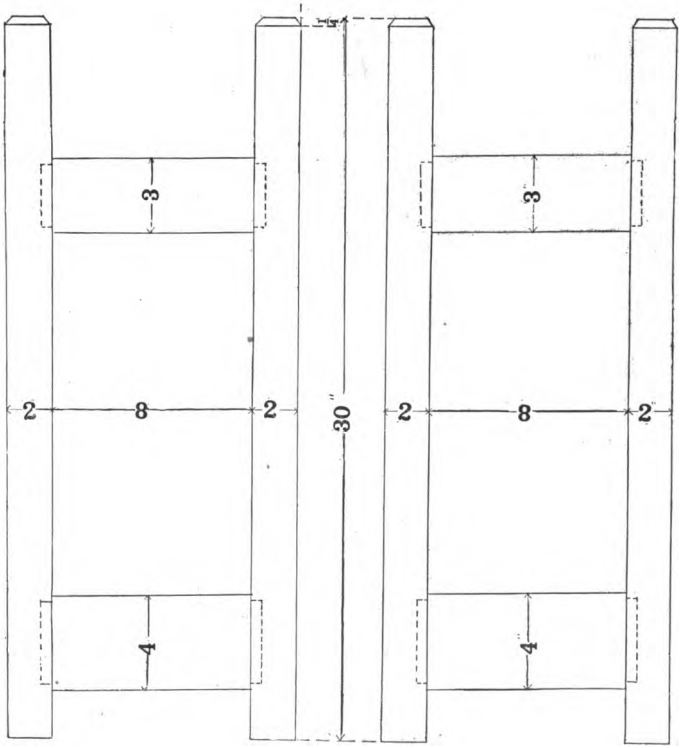

Digitized by Google

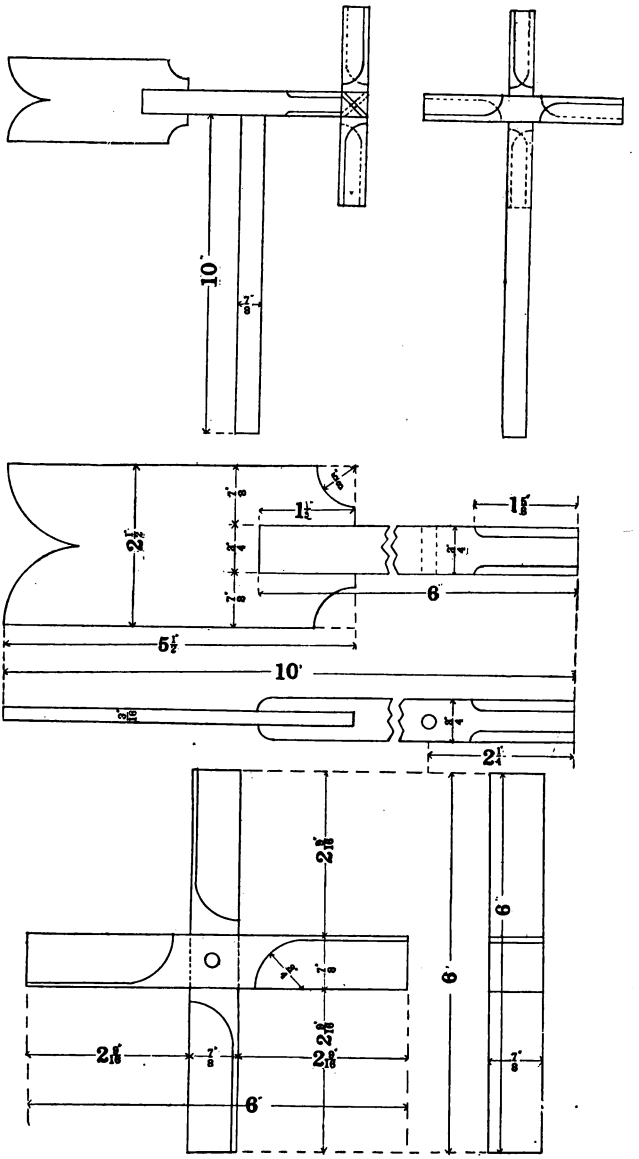

FIG. 202. — Windmill vane.

Digitized by Google

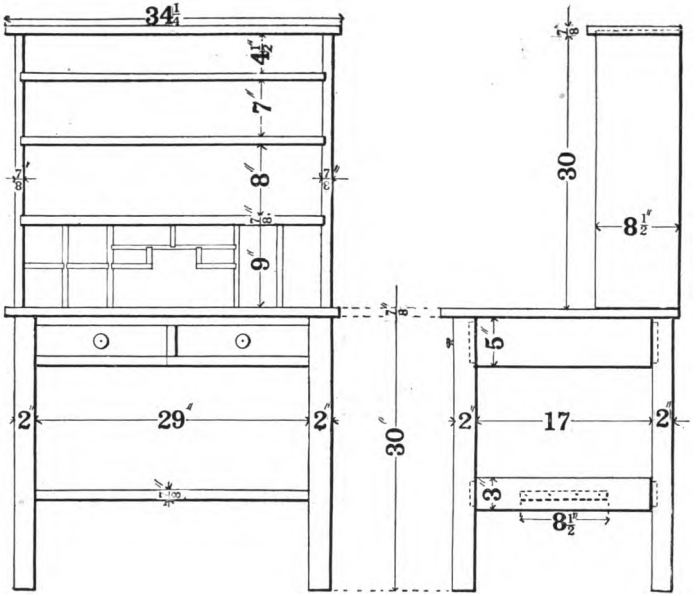

FIG. 203. — Combination desk and bookcase.

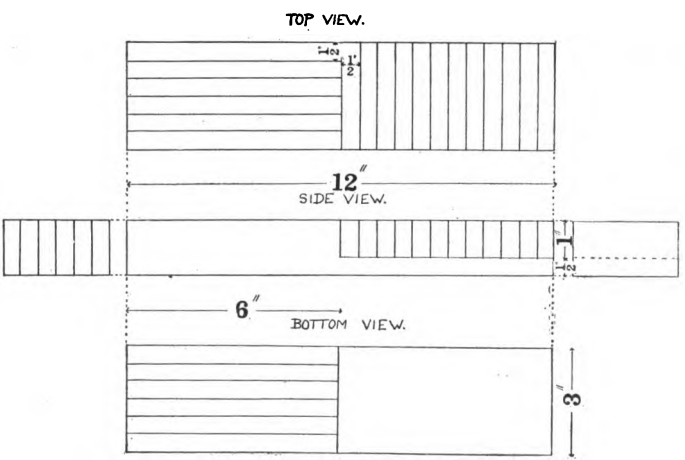

FIG. 204. — Sawing exercise.

Digitized by Google

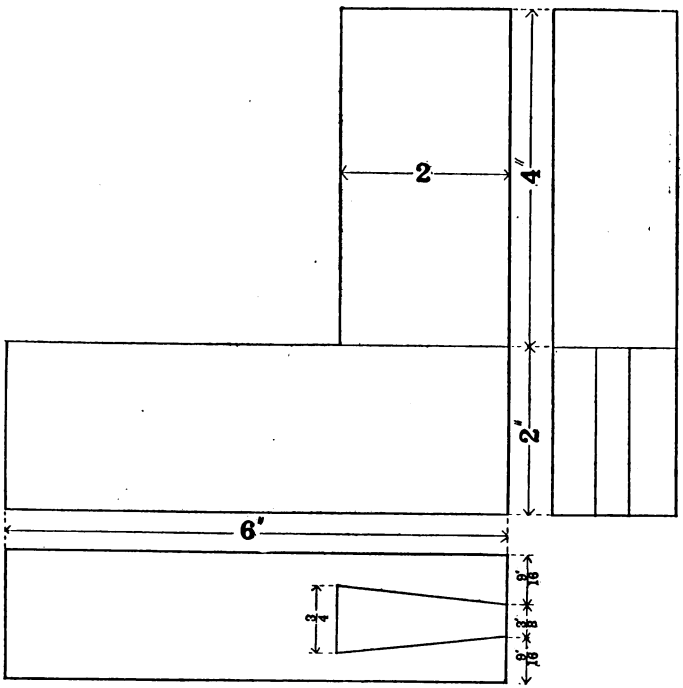

FIG. 205. — End dovetail joint.

Digitized by Google

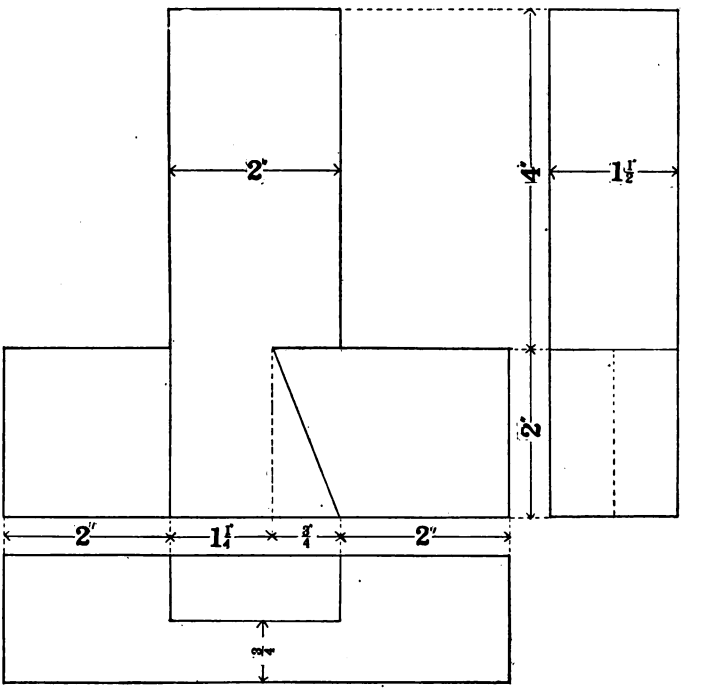

FIG. 206. — Half dovetail joint.

Digitized by Google

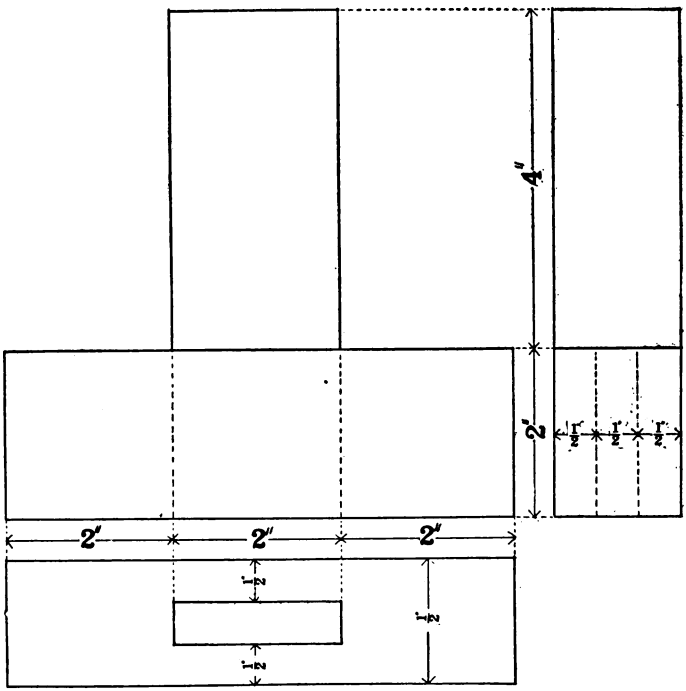

FIG. 207. — Through mortise-and-tenon joint.

Digitized by Google

PART VII

Wood Turning

The process of shaping wood by means of a machine called a *lathe*, Fig. 208, is called wood turning. The

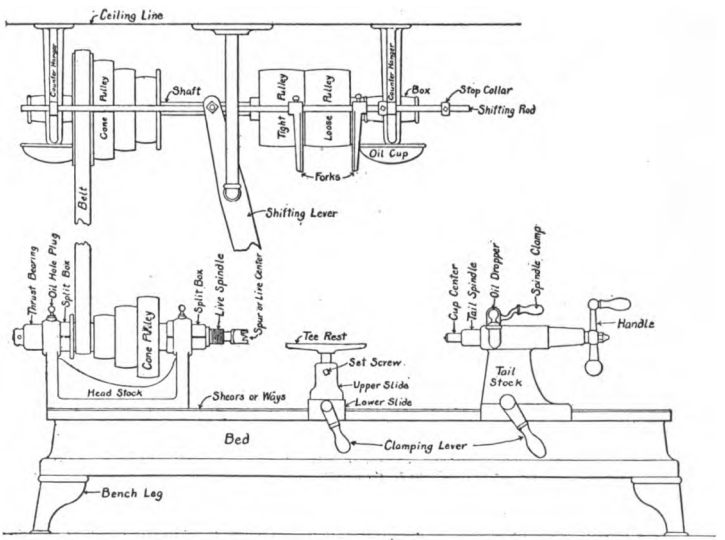

Fig. 208.— Wood-turning lathe (giving the name of each part).

block of wood to be shaped by the process of wood turning is put between two centers, called the *spur* or *live center* and the *cup* or *dead center*. The spur is set in motion and this in turn gives the block of wood a motion of revolution on the dead center. A turning tool resting

Digitized by Google

on the *tee rest* and held by the workman cuts away the waste wood, giving the required shape to the block of wood. Wood to be turned may also be fastened in the lathe by the *screw face plate*, the *dog face plate*, and the *bell chuck*, depending of course upon the kind of work to be done. In turning a small rosette or other similar work the screw face plate is used, while the dog face plate is used for the same kind of work only when larger blocks are to be used. The grain of the wood when a face plate is used is at right angles to the line of center. In turning an overhanging piece of wood which is parallel with the line of center, such as in turning a napkin ring, the bell chuck is used.

The lathe is an ancient machine, being invented, it is claimed, by Diodorus Siculus, the grandson of Dædalus. Pliny, however, ascribes it to Theodor of Samos (740 B.C.). Phidias and Pericles were experienced in its use. The lathe is also mentioned in the Bible as being used by the ancient Hebrews. The lathe has been adapted to many forms of work, and has passed through many stages in order to reach its present efficiency.

Fig. 208 is a drawing of a wood-turning lathe, showing the *countershaft* attached to the ceiling. The drawing also gives the name of each part. The student during his course should learn the names of all of the parts and should be able to apply these names intelligently.

Directions to Students for Lathe Work

1. Learn all of the adjustments of your lathe and the use of each tool as soon as possible. Learn the name of

Digitized by Google

each tool and the name of each part of the lathe as soon as possible, and learn to use those names intelligently.

2. There is danger in operating running machinery. *Be careful. Be thoughtful. Keep your sleeves away from the live center.* In using sandpaper, put the right hand over the block. This will bring the left hand away from the live center.

3. *Keep your tools sharp.* Learn from your instructor how to grind your tools on the grindstone and how to whet them on the oilstone and slip. In sharpening a tool always preserve the correct shape of the tool.

4. *Keep your lathe oiled.* Do not use too much oil. Just a few drops on the bearings before beginning each exercise is quite enough.

5. At the close of each exercise take your work out of the lathe, even though it is unfinished, dust off your tools and put them away in their proper places, then dust off your lathe very carefully.

Exercise No. 1

Stock: 1 (2″ × 2″ × 9″) whitewood or pine.

Directions:—

1. Lay out your tools.
2. Oil your lathe.
3. Center the block of wood to be turned. If the block is approximately true, draw the diagonals on the square ends. This will locate the center on each end.
4. Adjust the tail stock to accommodate the length of the wood and clamp it in place. Drive one end of the block into the spurs of the live center, using a mallet.

Digitized by Google

Fit the other end to the cup center and tighten, then loosen until the block turns easily in the lathe.

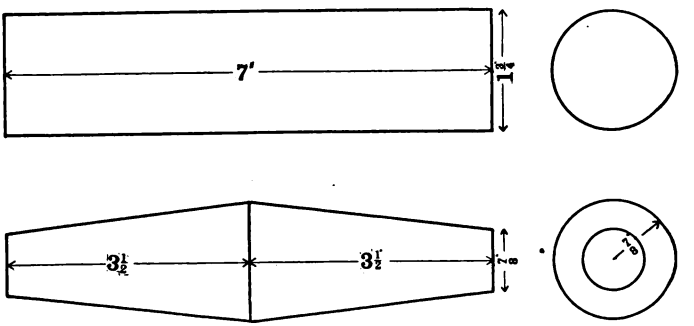

FIG. 209. — Turning exercises. — No. 1 and No. 2.

5. Adjust the tee rest. This should be as close as possible to the work, and for nearly all of the exercises the top should be nearly on a level with the centers. As a rule the tee rest should be a little higher when using the skew chisel than when using a gouge or parting tool.

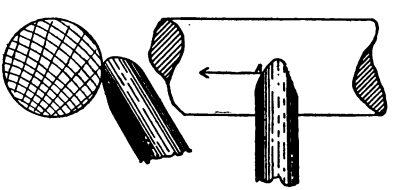

FIG. 210. — Showing the position of gouge in roughing down the work.

6. Start the lathe by means of the shifting lever and rough down the block. This is done by means of the gouge, as shown in Fig. 210 (the cutting point being at *A*, when the gouge is moving in the direction of the arrow). Cut the block down to nearly $1\frac{3}{4}''$, getting a uniform diameter.

7. The finishing cuts are made with the skew chisel

Digitized by Google

held as shown in Fig. 211. Cut the block down until a perfectly cylindrical block $1\frac{3}{4}''$ in diameter is produced. Measure with calipers.

8. With rule and pencil lay off 7″, leaving about 1″ waste at each end of the block.

9. With parting tool cut to these lines so that when you get through the block is exactly 7″ long. Cut nearly to the center of the block.

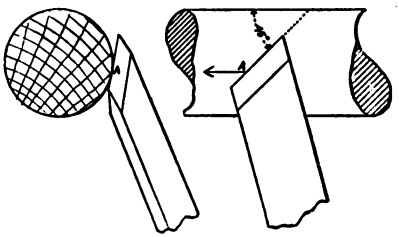

FIG. 211. — Showing the position of chisel in making a finishing cut.

10. Stop the lathe, remove the block, and with back saw saw off waste ends.

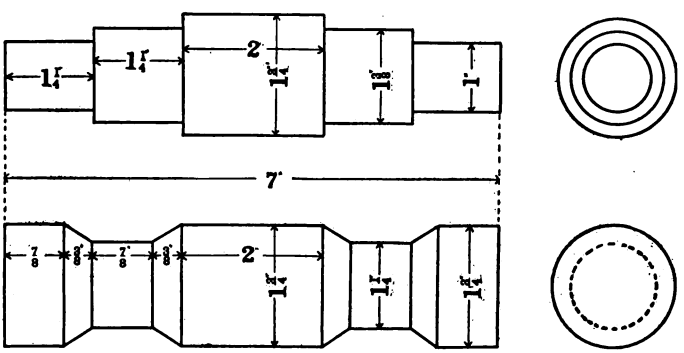

FIG. 212. — Turning exercises. — No. 3 and No. 4.

Exercise No. 2

Stock: 1 (2″ × 2″ × 9″) whitewood or pine.

Directions:—

Proceed as in Exercise No. 1 until the block is roughed

Digitized by Google

down to the approximate size, then finish with the skew chisel. Cut the ends down first, moving back towards the middle of the block at each stroke. Finish by cutting from the middle towards the ends. Learn to work rapidly at the lathe, yet work very carefully and accurately. Become efficient as soon as possible.

Exercise No. 3

Stock: 1 (2″ × 2″ × 9″) whitewood or pine.

Directions:—

Proceed as in Exercise No. 1 until the block is reduced to $1\frac{3}{4}$″ in diameter. Beginning near the middle of the

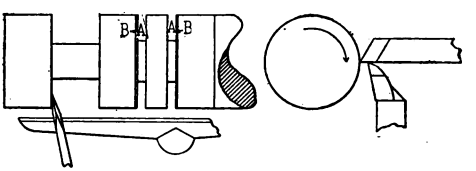

FIG. 213. — Showing position of chisel in finishing a shoulder, also cuts made with parting tool.

block, lay off the 2″ length. With parting tool cut down to the required depth on the outside edge of these lines, so that exactly 2″ remains between these cuts. With gouge and then with skew chisel remove the waste wood out to the ends to $1\frac{3}{8}$″ diameter. In a similar way cut down the $1\frac{1}{4}$″ lengths at the ends to 1″ in diameter. *Use no sandpaper in these practice exercises.* The end wood of the shoulders is finished with the skew chisel held as shown in Fig. 213.

Digitized by Google

Exercise No. 4

Stock: 1 (2″ × 2″ × 9″) whitewood or pine.

Work this exercise according to your experiences already gained.

Exercise No. 5

Stock: 1 (2″ × 2″ × 9″) whitewood or pine.

In working this exercise, turn the block down to the required diameter. With dividers set accurately, lay off the required lines. In cutting the concave curves, hold the gouge as shown in Fig. 214. In making the straight cuts at an angle of 45 degrees, hold the skew chisel as shown in Fig. 215.

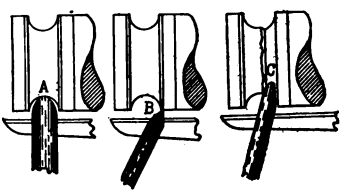

FIG. 214. — Showing the position of gouges in cutting concave curves.

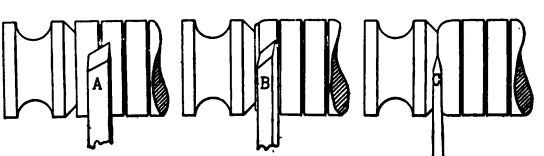

FIG. 215. — Showing the position of chisel in cutting at an angle.

Digitized by Google

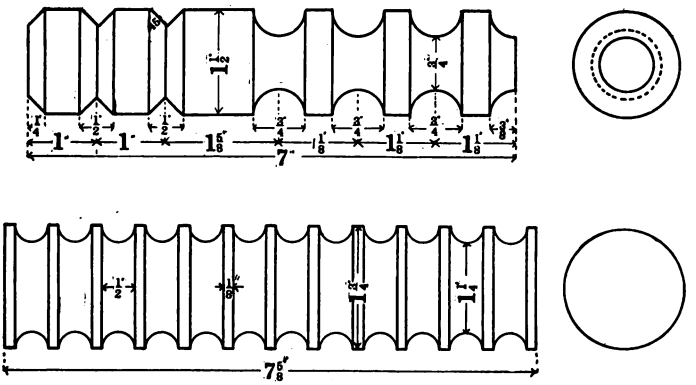

FIG. 216. — Turning exercises. — No. 5 and No. 6.

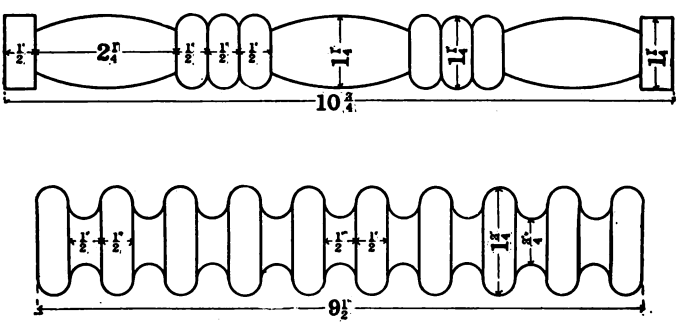

FIG. 217. — Turning exercises. — No. 7 and No. 8.

Digitized by Google

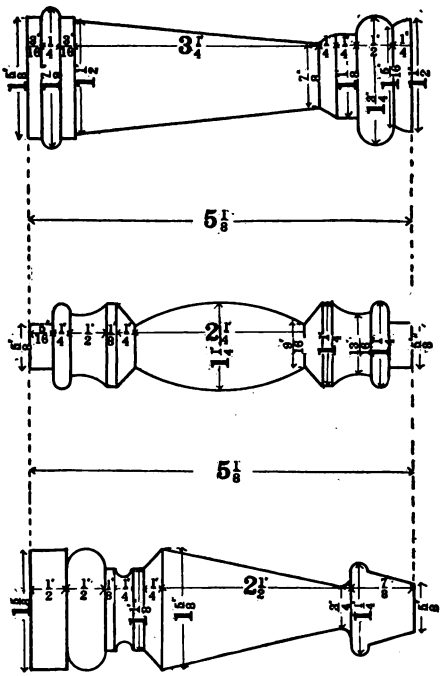

FIG. 218. — Turning exercises. — No. 9, No. 10, and No. 11.

Digitized by Google

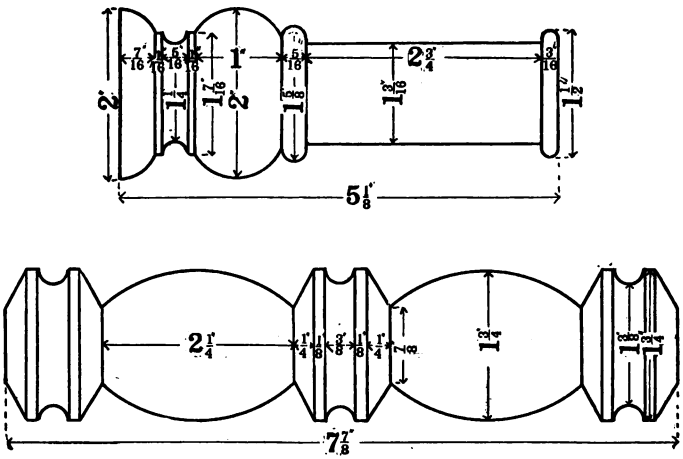

FIG. 219. — Turning exercises. — No. 12 and No. 13.

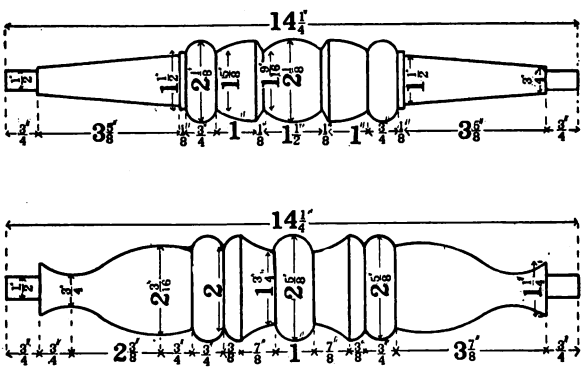

FIG. 220. — Turning exercises. — No. 14 and No. 15.

Digitized by Google

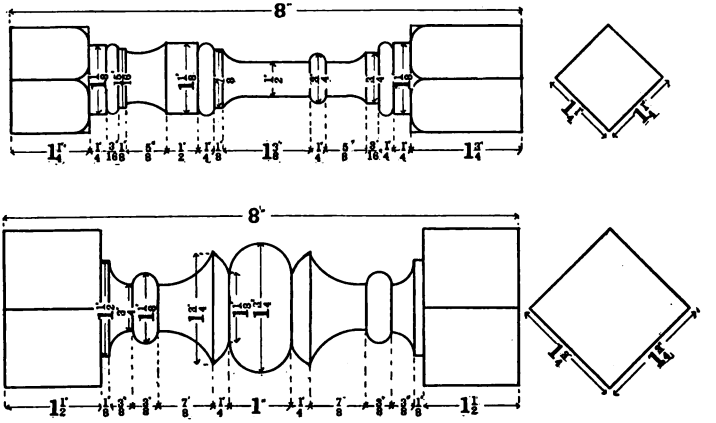

FIG. 221. — Turning exercises. — No. 16 and No. 17.

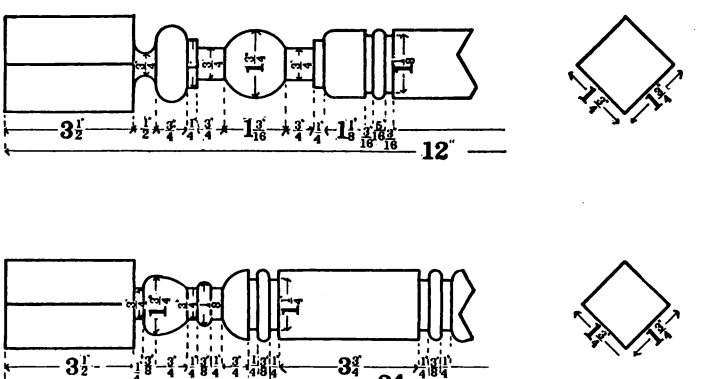

FIG. 222. — Turning exercises. — No. 18 and No. 19.

Digitized by Google

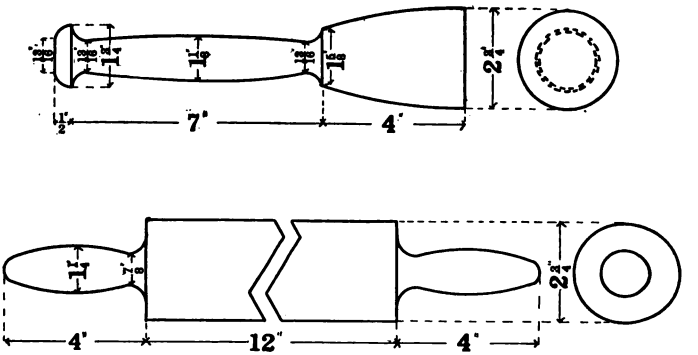

FIG. 223. — Turning exercises. — No. 20 and No. 21.

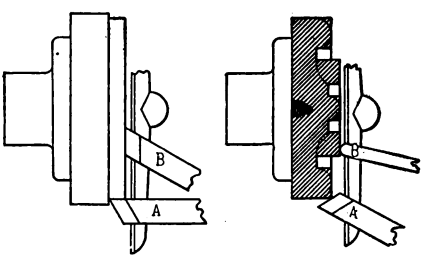

FIG. 224. — Showing face plate work in turning rosettes.

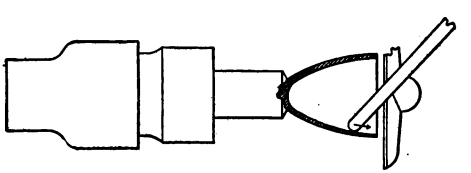

FIG. 225. — Showing bell chuck work.

Digitized by Google

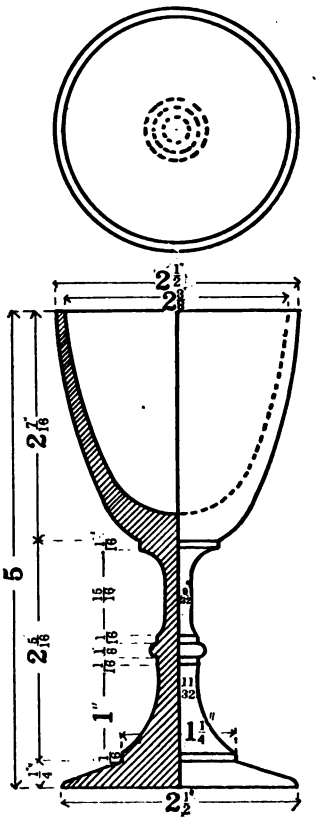

FIG. 226. — Turning exercise. — No. 22.

Digitized by Google

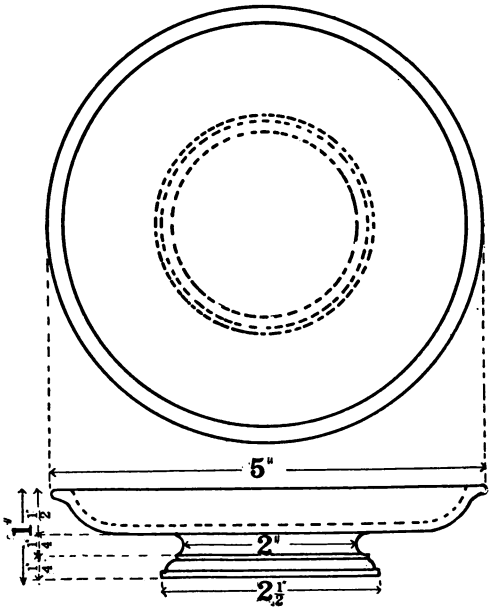

FIG. 227. — Turning exercise. — No. 23.

Digitized by Google

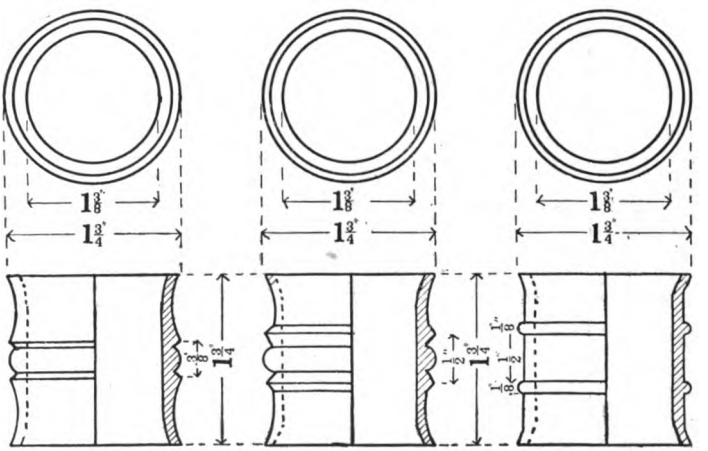

FIG. 228. — Turning exercises. — No. 24, No. 25, and No. 26.

Digitized by Google

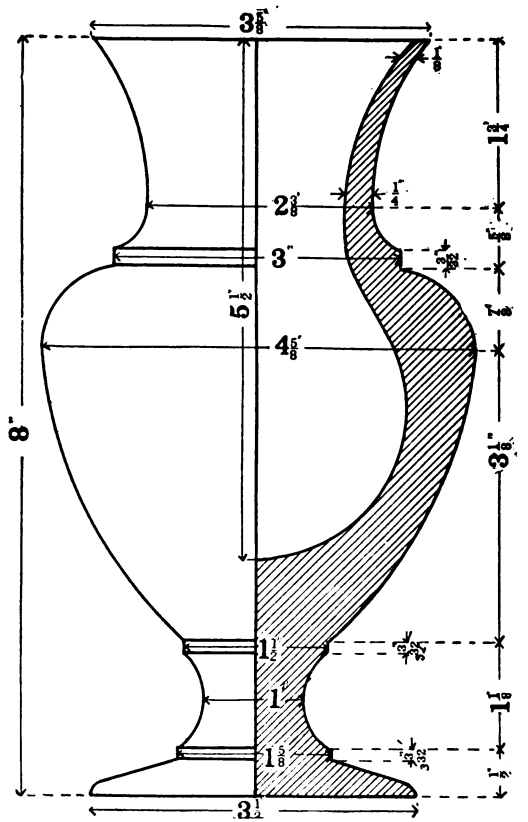

FIG. 229. — Turning exercise. — No. 27.

Digitized by Google

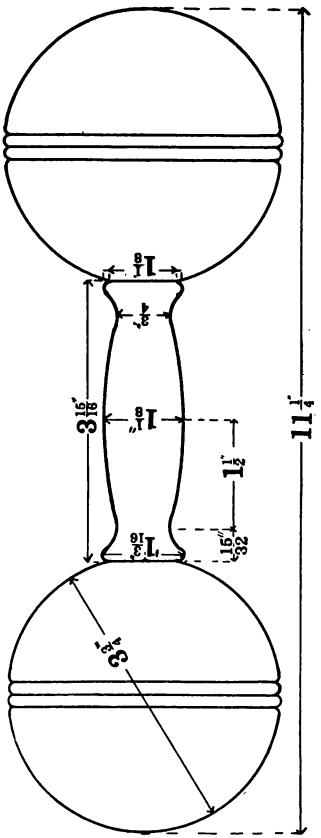

FIG. 230. — Turning exercise. — No. 28.

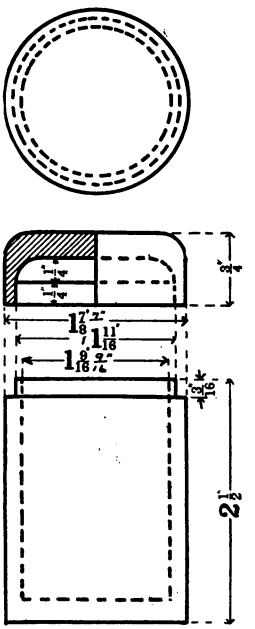

FIG. 231. — Turning exercise. — No. 29.

Digitized by Google

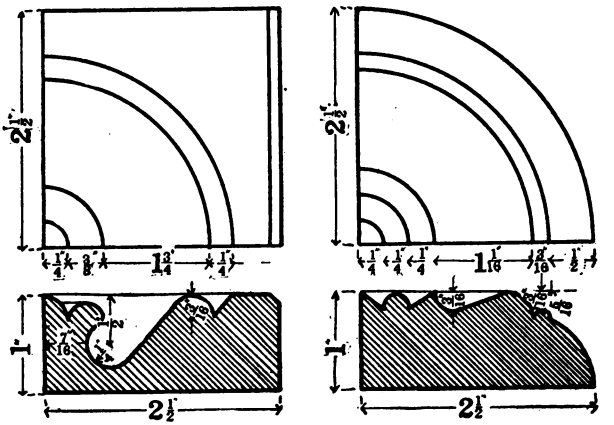

FIG. 232. — Turning exercises. — No. 30 and No. 31.

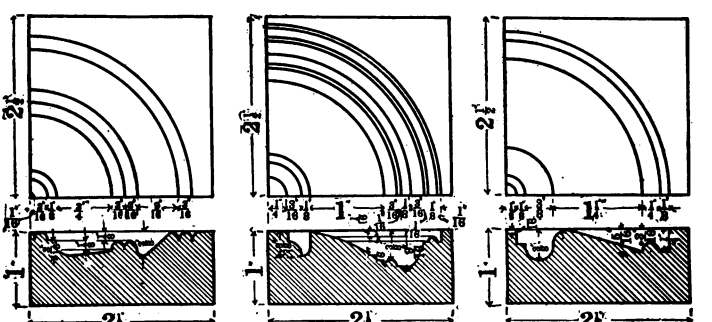

FIG. 233. — Turning exercises. — No. 32, No. 33, and No. 34.

Digitized by Google

APPENDIX A

Key to the More Important Woods of North America[1]

[The numbers preceding names refer to the List of Woods following the Key.]

Directions for Using Key

It is rather difficult at first to use a key of any kind. One must have some practice before accuracy is acquired in the collection of data used in the key. In the use of the following key one should work at first with a few samples of wood accurately named and large enough to show pith and bark and wide enough to show cross section. Do not use polished woods, but clean fresh specimens. After working with a few woods that are known so that the use of the key is understood, take several specimens of wood that are unknown and determine the kind of wood. For a close study of a specimen it is well to moisten the wood and cut off a thin, small section with a sharp knife, and put the bit of wood between two pieces of thin glass for study under the microscope or by holding to the light. After a few trials the value of the key will be understood and it will create much interest in woods.

[1] The following key is taken from "Timber," Bulletin No. 10, U. S. Dept. of Agric., Division of Forestry.

Digitized by Google

I. Non-porous Woods. — Pores not visible or conspicuous on cross section, even with magnifier. Annual rings distinct by denser (dark colored) bands of summer wood (Fig. 234).

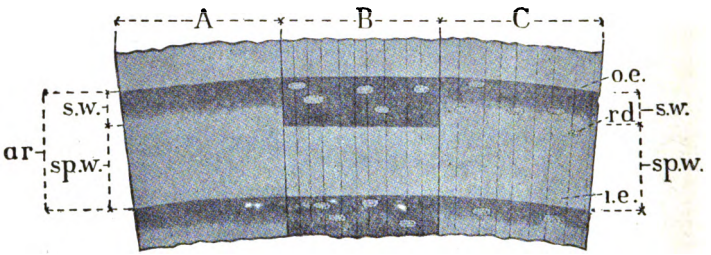

FIG. 234. — "Non-porous" woods. *A*, fir; *B*, "hard" pine; *C*, soft pine; *ar*, annual ring; *o.e.*, outer edge of ring; *i.e.*, inner edge of ring; *s.w.*, summer wood; *sp.w.*, spring wood; *rd*, resin ducts.

II. Ring-porous Woods. — Pores numerous, usually visible on cross section without magnifier. Annual

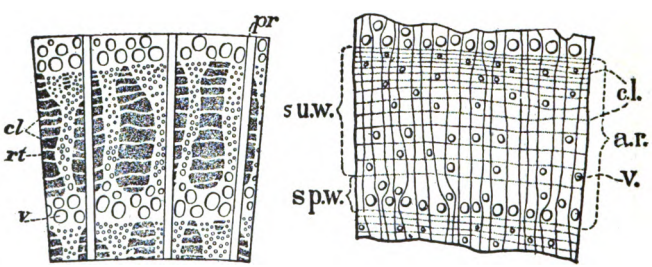

FIG. 235. — "Ring-porous" woods. White oak and hickory. *a.r.*, annual ring; *su.w.*, summer wood; *sp.w.*, spring wood; *v*, vessels or pores; *c.l.*, concentric lines; *rt*, darker tracts of hard fibers forming the firm part of oak wood; *pr*, pith rays.

rings distinct by a zone of large pores collected in the spring wood, alternating with the denser summer wood (Fig. 235).

Digitized by Google

III. Diffuse-porous Woods. — Pores numerous, usually not plainly visible on cross section without magnifier. Annual rings distinct by a fine line of denser summer-wood cells, often quite indistinct; pores scattered through annual ring, no zone of collected pores in spring wood (Fig. 236).

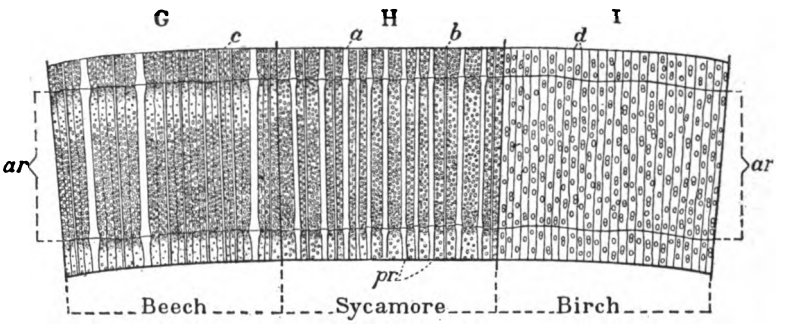

FIG. 236. — "Diffuse-porous" woods. *ar*, annual ring; *pr*, pith rays which are "broad" at *a*, "fine" at *b*, "indistinct" at *d*.

Note. — The above described three groups are exogenous, *i.e.* they grow by adding annually wood on their circumference. A fourth group is formed by the endogenous woods, like yuccas and palms, which do not grow by such additions.

Digitized by Google

I. — Non-Porous Woods

[Includes all coniferous woods.]

A. Resin ducts wanting.[1]

1. No distinct heartwood.
   - *a.* Color effect yellowish white; summer wood darker yellowish (under microscope pith ray without tracheids) (Nos. 9–13) **Fir.**
   - *b.* Color effect reddish (roseate) (under microscope pith ray with tracheids) (Nos. 14 and 15) **Hemlock.**

2. Heartwood present, color decidedly different in kind from sapwood.
   - *a.* Heartwood light orange red; sapwood, pale lemon; wood, heavy and hard (No. 38) **Yew.**
   - *b.* Heartwood purplish to brownish red; sapwood yellowish white; wood soft to medium hard light, usually with aromatic odor (No. 6) **Red Cedar.**
   - *c.* Heartwood maroon to terra cotta or deep brownish red; sapwood light orange to dark umber, very soft and light, no odor; pith rays very distinct, specially pronounced on radial section (No. 7) **Redwood.**

[1] To discover the resin ducts a very smooth surface is necessary, since resin ducts are frequently seen only with difficulty, appearing on the cross section as fine whiter or darker spots normally scattered singly, rarely in groups, usually in the summer wood of the annual ring. They are often much more easily seen on radial, and still more so on tangential sections, appearing there as fine lines or dots of open structure of different color or as indentations or pin scratches in a longitudinal direction.

Digitized by Google

3. Heartwood present, color only different in shade from sapwood, dingy yellowish brown.
   a. Odorless and tasteless
   (No. 8) **Bald Cypress.**
   b. Wood with mild resinous odor, but tasteless
   (Nos. 1–4) **White Cedar.**
   c. Wood with strong resinous odor and peppery taste when freshly cut
   (No. 5) **Incense Cedar.**

B. Resin ducts present.
1. No distinct heartwood; color white, resin ducts very small, not numerous (Nos. 33–36) **Spruce.**
2. Distinct heartwood present.
   a. Resin ducts numerous, evenly scattered through the ring.
      a'. Transition from spring wood to summer wood gradual; annual ring distinguished by a fine line of dense summer-wood cells; color white to yellowish red; wood soft and light
      (Nos. 18–21) **Soft Pines.**[1]
      b'. Transition from spring wood to summer wood more or less abrupt; broad bands of dark-colored summer wood; color from light to deep orange; wood medium hard and heavy
      (Nos. 22–32) **Hard Pines.**[1]
   b. Resin ducts not numerous nor evenly distributed.

[1] Soft and hard pines are arbitrary distinctions and the two not distinguishable at the limit.

Digitized by Google

a'. Color of heartwood orange-reddish, sapwood yellowish (same as hard pine); resin ducts frequently combined in groups of 8 to 30, forming lines on the cross section (tracheids with spirals)
(No. 37) **Douglas Spruce.**

b'. Color of heartwood light russet brown; of sapwood yellowish brown; resin ducts very few, irregularly scattered (tracheids without spirals)
(Nos. 16 and 17) **Tamarack.**

Additional Notes for Distinctions in the Group

Spruce is hardly distinguishable from fir, except by the existence of the resin ducts, and microscopically by the presence of tracheids in the medullary rays. Spruce may also be confounded with soft pine, except for the heartwood color of the latter and the larger, more frequent, and more readily visible resin ducts.

In the lumber yard, hemlock is usually recognized by color and the silvery character of its surface. Western hemlocks partake of this last character to a less degree.

Microscopically the white pine can be distinguished by having usually only one large pit, while spruce shows three to five very small pits in the parenchyma cells of the pith ray communicating with the tracheid.

The distinction of the pines is possible only by microscopic examination. The following distinctive features may assist in recognizing, when in the log or lumber pile, those usually found in the market:—

Digitized by Google

The light, straw color, combined with great lightness and softness, distinguishes the white pines (white pine and sugar pine) from the hard pines (all others in the market), which may also be recognized by the gradual change of spring wood into summer wood. This change in hard pines is abrupt, making the summer wood appear as a sharply defined and more or less broad band.

The Norway pine, which may be confounded with the shortleaf pine, can be distinguished by being much lighter and softer. It may also, but more rarely, be confounded with heavier white pine, but for the sharper definition of the annual ring, weight, and hardness.

The longleaf pine is strikingly heavy, hard, and resinous, and usually very regular and narrow ringed, showing little sapwood, and differing in this respect from the shortleaf pine and loblolly pine, which usually have wider rings and more sapwood, the latter excelling in that respect.

The following convenient and useful classification of pines into four groups, proposed by Dr. H. Mayr, is based on the appearance of the pith ray as seen in a radial section of the spring wood of any ring: —

Section I. Walls of the tracheids of the pith ray with dentate projections.

a. One to two large, simple pits to each tracheid on the radial walls of the cells of the pith ray. — Group 1. Represented in this country only by *P. resinosa*.

b. Three to six simple pits to each tracheid, on walls of the cells of the pith ray. — Group 2.

Digitized by Google

P. taeda, palustris, etc., including most of our "hard" and "yellow" pines.

Section II. Walls of tracheids of pith ray smooth, without dentate projections.

a. One or two large pits to each tracheid on the radial walls of each cell of the pith ray. — Group 3. *P. strobus, lambertiana,* and other true white pines.

b. Three to six small pits on the radial walls of each cell of the pith ray. — Group 4. *P. parryana,* and other nut pines, including also *P. balfouriana.*

II. — Ring-porous Woods

[Some of Group D and cedar elm imperfectly ring-porous.]

A. Pores in the summer wood minute, scattered singly or in groups, or in short broken lines, the course of which is never radial.

1. Pith rays minute, scarcely distinct.

a. Wood heavy and hard; pores in the summer wood not in clusters.

a'. Color of radial section not yellow (Nos. 39–44) **Ash.**

b'. Color of radial section light yellow; by which, together with its hardness and weight, this species is easily recognized (No. 103) **Osage Orange.**

b. Wood light and soft; pores in the summer wood in clusters of 10 to 30 (No. 56) **Catalpa.**

Digitized by Google

2. Pith rays very fine, yet distinct; pores in summer wood usually single or in short lines; color of heartwood reddish brown; of sapwood yellowish white; peculiar odor on fresh section (No. 111) **Sassafras.**
3. Pith rays fine, but distinct.
   a. Very heavy and hard; heartwood yellowish brown (No. 77) **Black Locust.**
   b. Heavy; medium hard to hard.
      a'. Pores in summer wood very minute, usually in small clusters of 3 to 8; heartwood light orange brown (No. 83) **Red Mulberry.**
      b'. Pores in summer wood small to minute, usually isolated; heartwood cherry red (No. 61) **Coffee Tree.**
4. Pith rays fine but very conspicuous, even without magnifier. Color of heartwood red; of sapwood pale lemon (No. 78) **Honey Locust.**

B. Pores of summer wood minute or small, in concentric wavy and sometimes branching lines, appearing as finely-feathered hatchings on tangential section.
1. Pith rays fine, but very distinct; color greenish white. Heartwood absent or imperfectly developed (No. 70) **Hackberry.**
2. Pith rays indistinct; color of heartwood reddish brown; sapwood grayish to reddish white (Nos. 62–66) **Elms.**

C. Pores of summer wood arranged in radial branching lines (when very crowded radial arrangement somewhat obscured).

Digitized by Google

1. Pith rays very minute, hardly visible (Nos. 58–60) **Chestnut.**
2. Pith rays very broad and conspicuous (Nos. 84–102) **Oak.**

D. Pores of summer wood mostly but little smaller than those of the spring wood, isolated and scattered; very heavy and hard woods. The pores of the spring wood sometimes form but an imperfect zone. (Some diffuse-porous woods of groups A and B may seem to belong here.)

1. Fine concentric lines (not of pores) as distinct, or nearly so, as the very fine pith rays; outer summer wood with a tinge of red; heartwood light reddish brown (Nos. 71–75) **Hickory.**
2. Fine concentric lines, much finer than the pith rays; no reddish tinge in summer wood; sapwood white; heartwood blackish (No. 105) **Persimmon.**

Additional Notes for Distinctions in the Group

Sassafras and mulberry may be confounded but for the greater weight and hardness and the absence of odor in the mulberry; the radial section of mulberry also shows the pith rays conspicuously.

Honey locust, coffee tree, and black locust are also very similar in appearance. The honey locust stands out by the conspicuousness of the pith rays, especially on radial sections, on account of their height, while the black locust is distinguished by the extremely great weight and hardness, together with its darker brown color.

Digitized by Google

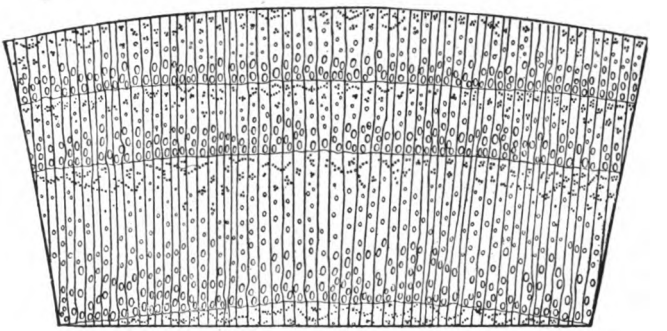

FIG. 237. — Wood of coffee tree.

The ashes, elms, hickories, and oaks may, on casual observation, appear to resemble one another on account of the pronounced zone of porous spring wood. The sharply defined large pith rays of the oak exclude these at once; the wavy lines of pores in the summer wood, appearing as conspicuous finely-feathered hatchings on tangential section, distinguish the elms; while the ashes differ from the hickory by the very conspicuously defined zone of spring-wood pores, which in hickory appear more or less interrupted. The reddish hue of the hickory and the more or less brown hue of the ash may also aid in ready recognition. The smooth, radial surface of split hickory will readily separate it from the rest.

The different species of ash may be identified as follows: —

1. Pores in the summer wood more or less united into lines.
   a. The lines short and broken, occurring mostly near the limit of the ring
   (No. 39) **White Ash.**

Digitized by Google

b. The lines quite long and conspicuous in most parts of the summer wood
(No. 43) **Green Ash.**

2. Pores in the summer wood not united into lines, or rarely so.

a. Heartwood reddish brown and very firm
(No. 40) **Red Ash.**

b. Heartwood grayish brown, and much more porous (No. 41) **Black Ash.**

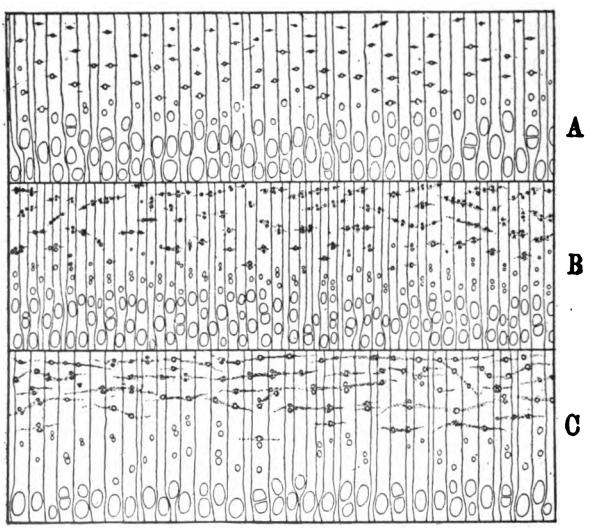

FIG. 238. — *A*, black ash; *B*, white ash; *C*, green ash.

In the oaks, two groups can be readily distinguished by the manner in which the pores are distributed in the summer wood. In the white oaks the pores are very fine and numerous and crowded in the outer part of the

Digitized by Google

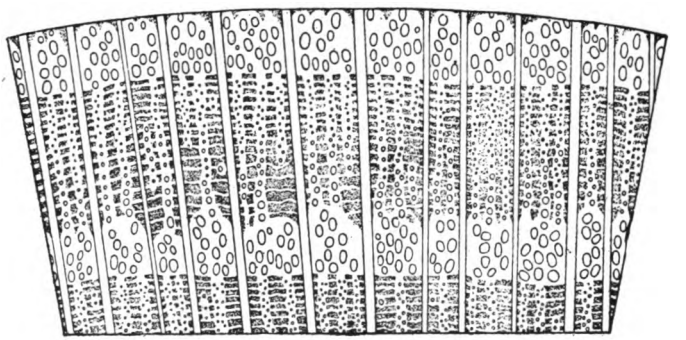

FIG. 239. — Wood of red oak.

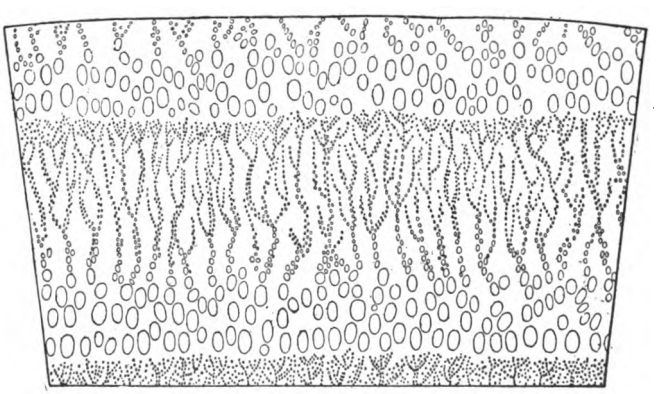

FIG. 240. — Wood of chestnut.

Digitized by Google

summer wood, while in the black or red oaks the pores are larger, few in number, and mostly isolated. The live

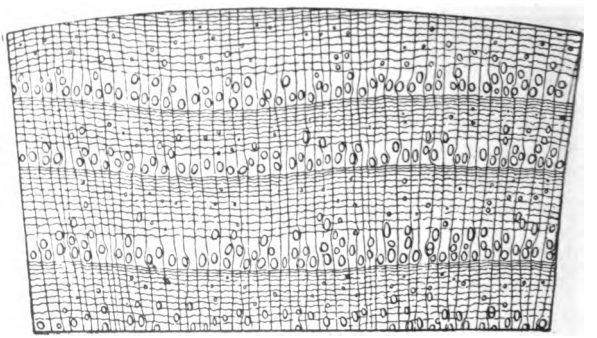

FIG. 241. — Wood of hickory.

oaks, as far as structure is concerned, belong to the black oaks, but are much less porous, and are exceeding heavy and hard.

III. — Diffuse-porous Woods

[A few indistinctly ring-porous woods of Group II, D, and cedar elm may seem to belong here.]

A. Pores varying in size from large to minute; largest in spring wood, thereby giving sometimes the appearance of a ring-porous arrangement.

1. Heavy and hard; color of heartwood (especially on longitudinal section) chocolate brown (No. 116) **Black Walnut.**
2. Light and soft; color of heartwood light reddish brown. (No. 55) **Butternut.**

Digitized by Google

B. Pores all minute and indistinct; most numerous in spring wood, giving rise to a lighter colored zone or line (especially on longitudinal section), thereby appearing sometimes ring-porous; wood hard, heartwood vinous reddish; pith rays very fine, but very distinct. (See also the sometimes indistinct ring-porous cedar elm, and occasionally winged elm, which are readily distinguished by the concentric wavy lines of pores in the summer wood) (No. 57) **Cherry.**

C. Pores minute or indistinct, neither conspicuously larger nor more numerous in the spring wood and evenly distributed.

1. Broad pith rays present.

a. All or most pith rays broad, numerous, and crowded, especially on tangential sections, medium heavy and hard, difficult to split (Nos. 112 and 113) **Sycamore.**

b. Only part of the pith rays broad.

a'. Broad pith rays well defined, quite numerous; wood reddish white to reddish (No. 47) **Beech.**

b'. Broad pith rays not sharply defined, made up of many small rays, not numerous. Stem furrowed, and therefore the periphery of section, and with it the annual rings sinuous, bending in and out, and the large pith rays generally limited to the furrows or concave portions. Wood white, not reddish (No. 52) **Blue Beech.**

Digitized by Google

2. No broad pith rays present.
   a. Pith rays small to very small, but quite distinct.
      a'. Wood hard.
         a''. Color reddish white, with dark reddish tinge in outer summer wood (Nos. 79–82) **Maple.**
         b''. Color white, without reddish tinge (No. 76) **Holly.**
      b'. Wood soft to very soft.
         a''. Pores crowded, occupying nearly all the space between pith rays.
            a'''. Color yellowish white, often with a greenish tinge in heartwood (No. 115) **Tulip Poplar,** (No. 116) **Cucumber Tree.**
            b'''. Color of sapwood grayish, of heartwood light to dark reddish brown (No. 69) **Sweet Gum.**
         b''. Pores not crowded, occupying not over one third the space between pith rays; heartwood brownish white to very light brown (Nos. 45 and 46) **Basswood.**
   b. Pith rays scarcely distinct, yet if viewed with ordinary magnifier, plainly visible.
      a'. Pores indistinct to the naked eye.
         a''. Color uniform pale yellow; pith rays not conspicuous even on the radial section (Nos. 53 and 54) **Buckeye.**

Digitized by Google

b''. Sapwood yellowish gray, heartwood grayish brown; pith rays conspicuous on the radial section (Nos. 67–68) **Sour Gum.**

b'. Pores scarcely distinct, but mostly visible as grayish specks on the cross section; sapwood whitish, heartwood reddish (Nos. 48–51) **Birch.**

D. Pith rays not visible or else indistinct, even if viewed with magnifier.

1. Wood very soft, white, or in shades of brown, usually with a silky luster (Nos. 105–110) **Cottonwood (Poplar).**

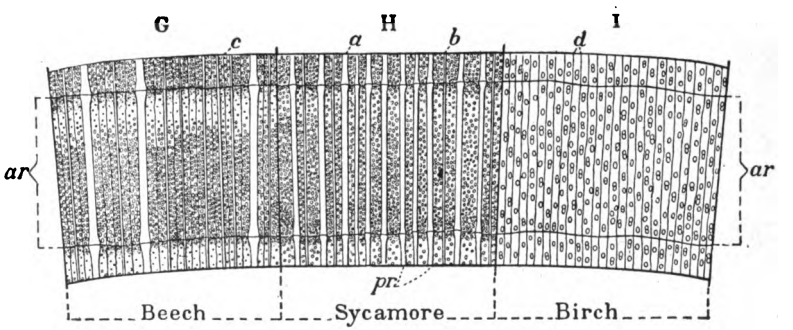

FIG. 242. — **Wood of beech, sycamore, and birch.**
(For explanation of letters see Fig. 236.)

Additional Notes for Distinctions in the Group

Cherry and birch are sometimes confounded, the high pith rays on the cherry on radial sections readily distinguishes it; distinct pores on birch and spring-wood zone in cherry as well as the darker vinous-brown color of the latter will prove helpful.

Digitized by Google

Two groups of birches can be readily distinguished, though specific distinction is not always possible.

1. Pith rays fairly distinct, the pores rather few and not more abundant in the spring wood; wood heavy, usually darker
(No. 48) **Cherry Birch**
and (No. 49) **Yellow Birch.**
2. Pith rays barely distinct, pores more numerous and commonly forming a more porous spring-wood zone; wood of medium weight
(No. 51) **Canoe** or **Paper Birch.**

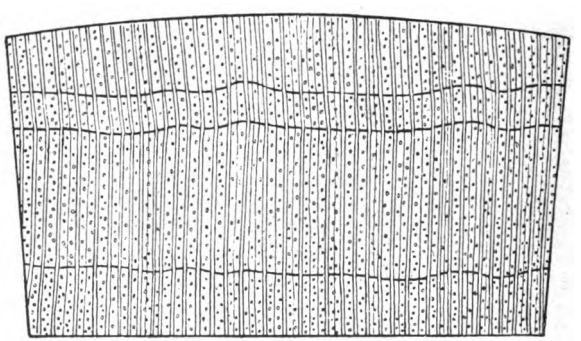

FIG. 243. — Wood of maple.

The species of maple may be distinguished as follows:

1. Most of the pith rays broader than the pores and very conspicuous (No. 79) **Sugar Maple.**
2. Pith rays not or rarely broader than the pores, fine but conspicuous.
   a. Wood heavy and hard, usually of darker reddish color and commonly spotted on cross section (No. 80) **Red Maple.**

Digitized by Google

b. Wood of medium weight and hardness, usually light colored (No. 82) **Silver Maple.**

Red maple is not always safely distinguished from soft maple. In box elder the pores are finer and more numerous than in soft maple.

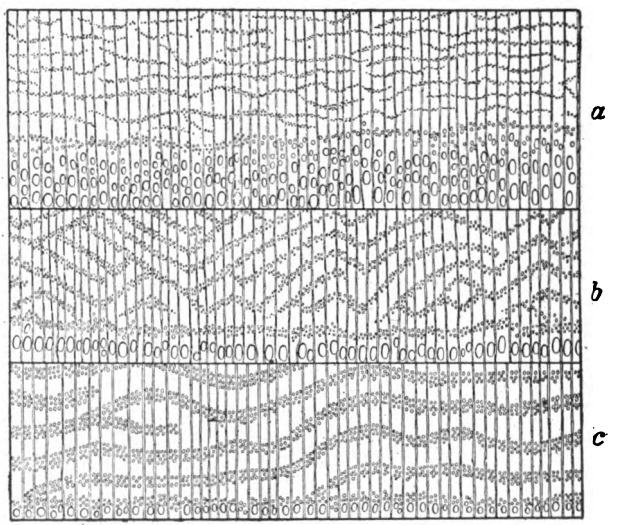

FIG. 244. — Wood of elm. *a*, red elm; *b*, white elm; *c*, winged elm.

The various species of elm may be distinguished as follows: —

1. Pores of spring wood form a broad band of several rows; easy splitting, dark brown heart (No. 64) **Red Elm.**
2. Pores of spring wood usually in a single row, or nearly so.
   a. Pores of spring wood large, conspicuously so (No. 62) **White Elm.**

Digitized by Google

b. Pores of spring wood small to minute.

a'. Lines of pores in summer wood fine, not as wide as the intermediate spaces, giving rise to very compact grain

(No. 63) **Rock Elm.**

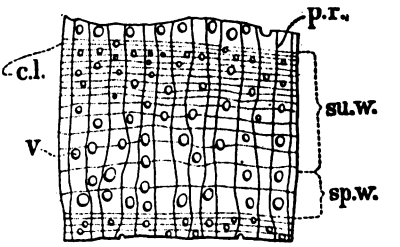

FIG. 245. — Walnut. *p.r.*, pith rays; *c.l.*, concentric lines; *v*, vessels or pores; *su.w.*, summer wood; *sp.w.*, spring wood.

b'. Lines of pores broad, commonly as wide as the intermediate spaces

(No. 66) **Winged Elm.**

c. Pores in spring wood indistinct, and therefore hardly a ring-porous wood

(No. 65) **Cedar Elm.**

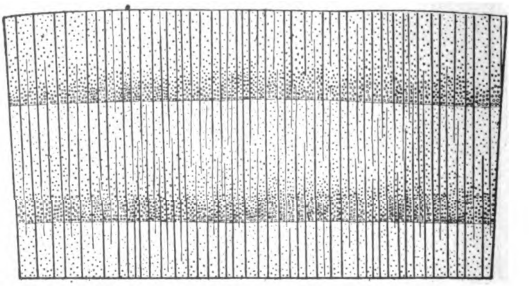

FIG. 246. — Wood of cherry.

Digitized by Google

List of the More Important Woods of the United States

[Arranged alphabetically.]

A. — Coniferous Woods

Woods of simple and uniform structure, generally light, soft but stiff; abundant in suitable dimensions and forming by far the greatest part of all the lumber used.

CEDAR. — Light, soft, stiff, not strong, of fine texture; sap and heartwood distinct, the former lighter, the latter a dull, grayish brown, or red. The wood seasons rapidly, shrinks and checks but little, and is very durable. Used like soft pine, but owing to its great durability preferred for shingles, etc. Small sizes used for posts, ties, etc.[1] Cedars usually occur scattered, but they form, in certain localities, forests of considerable extent.

a. White Cedars. — Heartwood a light grayish brown.

1. **White Cedar** (*Thuya occidentalis*) (arbor vitæ): Scattered along streams and lakes, frequently covering extensive swamps; rarely large enough for lumber, but commonly used for posts, ties, etc. Maine to Minnesota and northward.
2. **Canoe Cedar** (*Thuya gigantea*) (red cedar of the

[1] Since almost all kinds of woods are used for fuel and charcoal, and in the construction of fences, sheds, barns, etc., the enumeration of these uses has been omitted in this list.

Digitized by Google

West): In Oregon and Washington a very large tree, covering extensive swamps; in the mountains much smaller, skirting the water courses; an important lumber tree. Washington to northern California and eastward to Montana.

3. **White Cedar** (*Chamæcyparis thyoides*): Medium-sized tree, wood very light and soft. Along the coast from Maine to Mississippi.
4. **White Cedar** (*Chamæcyparis lawsoniana*) (Port Orford cedar, Oregon cedar, Lawson's cypress, ginger pine): A very large tree, extensively cut for lumber; heavier and stronger than the preceding. Along the coast line of Oregon.
5. **White Cedar** (*Libocedrus decurrens*) (incense cedar): A large tree, abundantly scattered among pine and fir; wood fine grained. Cascades and Sierra Nevada of Oregon and California.

b. Red Cedars. — Heartwood red.

6. **Red Cedar** (*Juniperus virginiana*) (Savin juniper): Similar to white cedar, but of somewhat finer texture. Used in cabinetwork, in cooperage, for veneers, and especially for lead pencils, for which purpose alone several million feet are cut each year. A small to medium sized tree scattered through the forests, or, in the West, sparsely covering extensive areas (cedar brakes). The red cedar is the most widely distributed conifer of the United States, occurring from the Atlantic to the Pacific and from Florida to Minnesota, but attains a suitable size for lumber only in the Southern, and more especially the Gulf States.

Digitized by Google

7. **Redwood** (*Sequoia sempervirens*): Wood in its quality and uses like white cedar; the narrow sapwood whitish; the heartwood light red, soon turning to brownish red when exposed. A very large tree, limited to the coast ranges of California, and forming considerable forests, which are rapidly being converted into lumber.

CYPRESS.

8. **Cypress** (*Taxodium distichum*) (bald cypress; black, white, and red cypress): Wood in appearance, quality, and uses similar to white cedar. "Black cypress" and "white cypress" are heavy and light forms of the same species. The cypress is a large deciduous tree, occupying much of the swamp and overflow land along the coast and rivers of the Southern States.

FIR. — This name is frequently applied to wood and to trees which are not fir; most commonly to spruce, but also, especially in English markets, to pine. It resembles spruce, but it is easily distinguished from it, as well as from pine and larch, by the absence of resin ducts. Quality, uses, and habits similar to spruce.

9. **Balsam Fir** (*Abies balsamea*): A medium-sized tree scattered throughout the Northern pineries; cut, in lumber operations, whenever of sufficient size, and sold with pine or spruce. Minnesota to Maine and northward.

10. **White Fir** (*Abies grandis* and *Abies concolor*): Medium to very large sized tree, forming an important part of most of the Western mountain forests,

Digitized by Google

and furnishing much of the lumber of the respective regions. The former occurs from Vancouver to central California and eastward to Montana; the latter from Oregon to Arizona and eastward to Colorado and New Mexico.

11. **White Fir** (*Abies amabilis*): Good-sized tree, often forming extensive mountain forests. Cascade Mountains of Washington and Oregon.
12. **Red Fir** (*Abies nobilis*) (not to be confounded with Douglas fir; see No. 37): Large to very large tree, forming with *A. amabilis* extensive forests on the slope of the mountains between 3000 and 4000 feet elevation. Cascade Mountains of Oregon.
13. **Red Fir** (*Abies magnifica*): Very large tree, forming forests about the base of Mount Shasta. Sierra Nevada of California, from Mount Shasta southward.

HEMLOCK. — Light to medium weight, soft, stiff but brittle, commonly crossgrained, rough and splintery; sapwood and heartwood not well defined; the wood of a light, reddish-gray color, free from resin ducts, moderately durable, shrinks and warps considerably, wears rough, retains nails firmly. Used principally for dimension stuff and timbers. Hemlocks are medium to large sized trees, commonly scattered among broad-leaved trees and conifers, but often forming forests of almost pure growth.

14. **Hemlock** (*Tsuga canadensis*): Medium-sized tree, furnishes almost all the hemlock of the Eastern market. Maine to Wisconsin; also following the Alleghanies southward to Georgia and Alabama.
15. **Hemlock** (*Tsuga mertensiana*): Large-sized tree,

Digitized by Google

wood claimed to be heavier and harder than the Eastern form and of superior quality. Washington to California and eastward to Montana.

LARCH or TAMARACK. — Wood like the best of hard pine, both in appearance, quality, and uses, and owing to its great durability somewhat preferred in ship-building, for telegraph poles, and railroad ties. In its structure it resembles spruce. The larches are deciduous trees, occasionally covering considerable areas, but usually scattered among other conifers.

16. **Tamarack** (*Larix americana*) (Hackmatack): Medium-sized tree, often covering swamps, in which case it is smaller and of poor quality. Maine to Minnesota, and southward to Pennsylvania.
17. **Tamarack** (*L. occidentalis*): Large-sized trees, scattered, locally abundant. Washington and Oregon to Montana.

PINE. — Very variable, very light and soft in "soft" pine, such as white pine; of medium weight to heavy and quite hard in "hard" pine, of which longleaf or Georgia pine is the extreme form. Usually it is stiff, quite strong, of even texture, and more or less resinous. The sapwood is yellowish white; the heartwood, orange brown. Pine shrinks moderately, seasons rapidly and without much injury; it works easily; is never too hard to nail (unlike oak or hickory); it is mostly quite durable, and if well seasoned is not subject to the attacks of boring insects. The heavier the wood the darker, stronger, and harder it is, and the more it shrinks and checks. Pine is used more extensively than any other kind of wood. It is the principal wood

Digitized by Google

in common carpentry, as well as in all heavy construction, bridges, trestles, etc. It is also used in almost every other wood industry, for spars, masts, planks, and timbers in shipbuilding, in car and wagon construction, in cooperage, for crates and boxes, in furniture work, for toys and patterns, railway ties, water pipes, excelsior, etc. Pines are usually large trees with few branches, the straight, cylindrical, useful stem forming by far the greatest part of the tree; they occur gregariously, forming vast forests, a fact which greatly facilitates their exploitation. Of the many special terms applied to pine as lumber, denoting sometimes differences in quality, the following deserve attention:—

"White pine," "pumpkin pine," "soft pine," in the Eastern markets refer to the wood of the white pine (*Pinus strobus*), and on the Pacific Coast to that of the sugar pine (*P. lambertiana*).

"Yellow pine" is applied in the trade to all the Southern lumber pines; in the Northeast it is also applied to the pitch pine (*P. rigida*); in the West it refers mostly to bull pine (*P. ponderosa*).

"Yellow longleaf pine," "Georgia pine," chiefly used in advertisement, refers to longleaf pine (*P. palustris*).

"Hard pine" is a common term in carpentry, and applies to everything except white pine.

"Pitch pine" includes all Southern pines and also the true pitch pine (*P. rigida*), but is mostly applied, especially in foreign markets, to the wood of the longleaf pine (*P. palustris*).

Digitized by Google

For the great variety of confusing local names applied to the Southern pines in their homes, part of which have been adopted in the markets of the Atlantic seaboard, see report of Chief Division of Forestry for 1891, page 212, etc., and also the list below:—

a. Soft Pines.

18. **White Pine** (*Pinus strobus*): Large to very large sized tree; for the last fifty years the most important timber tree of the Union, furnishing the best quality of soft pine. Minnesota, Wisconsin, Michigan, New England, along the Alleghanies to Georgia.
19. **Sugar Pine** (*Pinus lambertiana*): A very large tree, together with *Abies concolor* forming extensive forests; important lumber tree. Oregon and California.
20. **White Pine** (*Pinus monticola*): A large tree, at home in Montana, Idaho, and the Pacific States; most common and locally used in northern Idaho.
21. **White Pine** (*Pinus flexilis*): A small tree, forming mountain forests of considerable extent and locally used; eastern Rocky Mountain slopes; Montana to New Mexico.

b. Hard Pines.

22. **Longleaf Pine** (*Pinus palustris*) (Georgia pine, yellow pine, long straw pine, etc.): Large tree; forms extensive forests and furnishes the hardest and strongest pine lumber in the market. Coast region from North Carolina to Texas.
23. **Bull Pine** (*Pinus ponderosa*) (yellow pine): Medium to very large sized tree, forming extensive forests in Pacific and Rocky Mountain regions;

Digitized by Google

furnishes most of the hard pine of the West; sapwood wide; wood very variable.

24. **Loblolly Pine** (*Pinus tæda*) (slash pine, old field pine, rosemary pine, sap pine, short straw pine, etc.): Large-sized tree, forms extensive forests; wider ringed, coarser, lighter, softer, with more sapwood, than the longleaf pine, but the two often confounded. This is the common lumber pine from Virginia to South Carolina, and is found extensively in Arkansas and Texas. Southern States; Virginia to Texas and Arkansas.
25. **Norway Pine** (*Pinus resinosa*): Large-sized tree, never forming forests, usually scattered or in small groves, together with white pine; largely sapwood and hence not durable. Minnesota to Michigan; also in New England to Pennsylvania.
26. **Shortleaf Pine** (*Pinus echinata*) (slash pine, Carolina pine, yellow pine, old field pine, etc.): Resembles loblolly pine; often approaches in its wood the Norway pine. The common lumber pine of Missouri and Arkansas. North Carolina to Texas and Missouri.
27. **Cuban Pine** (*Pinus cubensis*) (slash pine, swamp pine, bastard pine, meadow pine): Resembles longleaf pine, but commonly has wider sapwood and coarser grain; does not enter the markets to any great extent. Along the coast from South Carolina to Louisiana.
28. **Bull Pine** (*Pinus jeffreyi*) (black pine): Large-sized tree, wood resembling bull pine (*P. ponderosa*); used locally in California, replacing *P. ponderosa* at high altitudes.

Digitized by Google

The following are small to medium sized pines, not commonly offered as lumber in the market; used locally for timber, ties, etc.: —

29. **Black Pine** (*Pinus murrayana*) (lodge-pole pine, tamarack): Rocky Mountains and Pacific regions.
30. **Pitch Pine** (*Pinus rigida*): Along the coast from New York to Georgia and along the mountains to Kentucky.
31. **Jersey Pine** (*Pinus inops*) (scrub pine): As before.
32. **Gray Pine** (*Pinus banksiana*) (scrub pine): Maine, Vermont, and Michigan to Minnesota.

REDWOOD. (*See* **Cedar.**)

SPRUCE. — Resembles soft pine, is light, very soft, stiff, moderately strong, less resinous than pine; has no distinct heartwood, and is of whitish color. Used like soft pine, but also employed as resonance wood and preferred for paper pulp. Spruces, like pines, form extensive forests; they are more frugal, thrive on thinner soils, and bear more shade, but usually require a more humid climate. "Black" and "white spruce," as applied by lumbermen, usually refer to narrow and wide ringed forms of the black spruce (*Picea nigra*).

33. **Black Spruce** (*Picea nigra*): Medium-sized tree, forms extensive forests in northeastern United States and in British America; occurs scattered or in groves, especially in low lands throughout the Northern pineries. Important lumber tree in eastern United States. Maine to Minnesota, British America, and on the Alleghanies to North Carolina.
34. **White Spruce** (*Picea alba*): Generally associated

Digitized by Google

with the preceding; most abundant along streams and lakes, grows largest in Montana, and forms the most important tree of the subarctic forest of British America. Northern United States, from Maine to Minnesota, also from Montana to Pacific, British America.

35. **White Spruce** (*Picea engelmanni*): Medium to large sized tree, forming extensive forests at elevations from 5000 to 10,000 feet above sea level; resembles the preceding, but occupies a different station. A very important timber tree in the central and southern parts of the Rocky Mountains. Rocky Mountains from Mexico to Montana.

36. **Tide-land Spruce** (*Picea sitchensis*): A large-sized tree, forming an extensive coast-belt forest. Along the seacoast from Alaska to Central California.

BASTARD SPRUCE. — Spruce or fir in name, but resembling hard pine or larch in the appearance, quality, and uses of its wood.

37. **Douglas Spruce** (*Pseudotsuga douglasii*) (yellow fir, red fir, Oregon pine): One of the most important trees of the western United States; grows very large in the Pacific States, to fair size in all parts of the mountains, in Colorado up to about 10,000 feet above sea level; forms extensive forests, often of pure growth. Wood very variable, usually coarse-grained and heavy, with very pronounced summer wood, hard and strong ("red" fir), but often fine-grained and light ("yellow" fir). It replaces hard pine and is especially suited to heavy construction.

Digitized by Google

From the plains to the Pacific Ocean; from Mexico to British America.

TAMARACK. (*See* **Larch.**)

YEW. — Wood heavy, hard, extremely stiff and strong, of fine texture with a pale yellow sapwood, and an orange red heart; seasons well and is quite durable. Yew is extensively used for archery, bows, turner's ware, etc. The yews form no forests, but occur scattered with other conifers.

38. **Yew** (*Taxus brevifolia*): A small to medium sized tree of the Pacific region.

B. — Broad-leaved Woods (Hardwoods)

Woods of complex and very variable structure and therefore differing widely in quality, behavior, and consequently in applicability to the arts.

ASH. — Wood heavy, hard, strong, stiff, quite tough, not durable in contact with soil, straight grained, rough on the split surface and coarse in texture. The wood shrinks moderately, seasons with little injury, stands well, and takes a good polish. In carpentry ash is used for finishing lumber, stairways, panels, etc.; it is used in shipbuilding, in the construction of cars, wagons, carriages, etc., in the manufacture of farm implements, machinery, and especially of furniture of all kinds, and also for harness work; for barrels, baskets, oars, tool handles, hoops, clothespins, and toys. The trees of the several species of ash are rapid growers, of small to medium height with stout

Digitized by Google

trunks; they form no forests, but occur scattered in almost all our broad-leaved forests.

39. **White Ash** (*Fraxinus americana*): Medium, sometimes large sized tree. Basin of the Ohio, but found from Maine to Minnesota and Texas.
40. **Red Ash** (*Fraxinus pubescens*): Small-sized tree. North Atlantic States, but extends to the Mississippi.
41. **Black Ash** (*Fraxinus sambucifolia*) (hoop ash, ground ash): medium-sized tree, very common. Maine to Minnesota, and southward to Virginia and Arkansas.
42. **Blue Ash** (*Fraxinus quadrangulata*): Small to medium sized. Indiana and Illinois; occurs from Michigan to Minnesota and southward to Alabama.
43. **Green Ash** (*Fraxinus viridis*): Small-sized tree. New York to the Rocky Mountains, and southward to Florida and Arizona.
44. **Oregon Ash** (*Fraxinus oregana*): Medium-sized tree. Western Washington to California.

ASPEN. (*See* **Poplar.**)

BASSWOOD.

45. **Basswood** (*Tilia americana*) (lime tree, American linden, lin, bee tree): Wood light, soft, stiff but not strong, of fine texture, and white to light brown color. The wood shrinks considerably in drying, works and stands well; it is used in carpentry, in the manufacture of furniture and wooden ware, both turned and carved, in cooperage, for toys, also for paneling of car and carriage bodies. Medium to large sized tree, common in all Northern broad-

Digitized by Google

leaved forests; found throughout the eastern United States.

46. **White Basswood** (*Tilia heterophylla*): A small-sized tree most abundant in the Alleghany region.

BEECH.

47. **Beech** (*Fagus ferruginea*): Wood heavy, hard, stiff, strong, or rather coarse texture, white to light brown, not durable in the ground, and subject to the inroads of boring insects; it shrinks and checks considerably in drying, works and stands well and takes a good polish. Used for furniture, in turnery, for handles, lasts, etc. Abroad it is very extensively employed by the carpenter, millwright, and wagon maker, in turnery as well as wood carving. The beech is a medium-sized tree, common, sometimes forming forests; most abundant in the Ohio and Mississippi basin, but found from Maine to Wisconsin and southward to Florida.

BIRCH. — Wood heavy, hard, strong, of fine texture; sapwood whitish, heartwood in shades of brown with red and yellow; very handsome, with satiny luster, equaling cherry. The wood shrinks considerably in drying, works and stands well and takes a good polish, but is not durable if exposed. Birch is used for finishing lumber in building, in the manufacture of furniture, in wood turnery for spools, boxes, wooden shoes, etc., for shoe lasts and pegs, for wagon hubs, ox yokes, etc., also in wood carving. The birches are medium-sized trees, form extensive forests northward, and occur scattered in all broad-leaved forests of the eastern United States.

Digitized by Google

48. **Cherry Birch** (*Betula lenta*) (black birch, sweet birch, mahogany birch): Medium-sized tree; very common. Maine to Michigan and to Tennessee.
49. **Yellow Birch** (*Betula lutea*) (gray birch): Medium-sized tree; common. Maine to Minnesota and southward to Tennessee.
50. **Red Birch** (*Betula nigra*) (river birch): Small to medium sized tree; very common; lighter and less valuable than the preceding. New England to Texas and Missouri.
51. **Canoe Birch** (*Betula papyrifera*) (white birch, paper birch): Generally a small tree; common, forming forests; wood of good quality but lighter. All along the northern boundary of United States and northward, from the Atlantic to the Pacific.

BLACK WALNUT. (*See* **Walnut.**)

BLUE BEECH.

52. **Blue Beech** (*Carpinus caroliniana*) (hornbeam, water beech, ironwood): Wood very heavy, hard, strong, very stiff, of rather fine texture and white color; not durable in the ground; shrinks and checks greatly, but works and stands well. Used chiefly in turnery for tool handles, etc. Abroad, much used by mill and wheel wrights. A small tree, largest in the Southwest, but found in nearly all parts of the eastern United States.

BOIS D'ARC. (*See* **Osage Orange.**)

BUCKEYE — HORSE-CHESTNUT. — Wood light, soft, not strong, often quite tough, of fine and uniform texture and creamy white color. It shrinks considerably, but works and stands well. Used for wooden-

Digitized by Google

ware, artificial limbs, paper pulp, and locally also for building lumber. Small-sized trees, scattered.

53. **Ohio Buckeye** (*Æsculus glabra*) (fetid buckeye): Alleghanies, Pennsylvania to Indian Territory.

54. **Sweet Buckeye** (*Æsculus flava*): Alleghanies, Pennsylvania to Texas.

BUTTERNUT.

55. **Butternut** (*Juglans cinerea*) (white walnut): Wood very similar to black walnut, but light, quite soft, not strong and of light brown color. Used chiefly for finishing lumber, cabinetwork, and cooperage. Medium-sized tree, largest and most common in the Ohio basin; Maine to Minnesota and southward to Georgia and Alabama.

CATALPA.

56. **Catalpa** (*Catalpa speciosa*): Wood light, soft, not strong, brittle, durable, of coarse texture and brown color; used for ties and posts, but well suited for a great variety of uses. Medium-sized tree; lower basin of the Ohio River, locally common. Extensively planted, and therefore promising to become of some importance.

CHERRY.

57. **Cherry** (*Prunus serotina*): Wood heavy, hard, strong, of fine texture; sapwood yellowish white, heartwood reddish to brown. The wood shrinks considerably in drying, works and stands well, takes a good polish, and is much esteemed for its beauty. Cherry is chiefly used as a decorative finishing lumber for buildings, cars, and boats, also for furniture and in turnery. It is becoming too costly

Digitized by Google

for many purposes for which it is naturally well suited. The lumber-furnishing cherry of this country, the wild black cherry (*Prunus serotina*), is a small to medium sized tree, scattered through many of the broad-leaved woods of the western slope of the Alleghanies, but found from Michigan to Florida and west to Texas. Other species of this genus as well as the hawthorns (*Cratægus*) and wild apple (*Pyrus*) are not commonly offered in the market. Their wood is of the same character as cherry, often even finer, but in small dimensions.

CHESTNUT.

58. **Chestnut** (*Castanea vulgaris* var. *americana*): Wood light, moderately soft, stiff, not strong, of coarse texture; the sapwood light, the heartwood darker brown. It shrinks and checks considerably in drying, works easily, stands well, and is very durable. Used in cabinetwork, cooperage, for railway ties, telegraph poles, and locally in heavy construction. Medium-sized tree, very common in the Alleghanies, occurs from Maine to Michigan and southward to Alabama.
59. **Chinquapin** (*Castanea pumila*): A small-sized tree, with wood slightly heavier but otherwise similar to the preceding; most common in Arkansas, but with nearly the same range as the chestnut.
60. **Chinquapin** (*Castanopsis chrysophylla*).: A medium-sized tree of the western ranges of California and Oregon.

COFFEE TREE.

61. **Coffee Tree** (*Gymnocladus canadensis*) (coffee nut):

Digitized by Google

Wood heavy, hard, strong, very stiff, of coarse texture, durable; the sapwood yellow, the heartwood reddish brown; shrinks and checks considerably in drying; works and stands well and takes a good polish. It is used to a limited extent in cabinetwork. A medium to large sized tree; not common. Pennsylvania to Minnesota and Arkansas.

COTTONWOOD. (*See* **Poplar.**)

CUCUMBER TREE. (*See* **Tulip.**)

ELM. — Wood heavy, hard, strong, very tough; moderately durable in contact with the soil; commonly crossgrained, difficult to split and shape, warps, and checks considerably in drying, but stands well if properly handled. The broad sapwood whitish, heart, brown, both with shades of gray and red; on split surface rough; texture coarse to fine; capable of high polish. Elm is used in the construction of cars, wagons, etc., in boat and ship building, for agricultural implements and machinery; in rough cooperage, saddlery and harness work, but particularly in the manufacture of all kinds of furniture, where the beautiful figures, especially those of the tangential or bastard section, are just beginning to be duly appreciated. The elms are medium to large sized trees, of fairly rapid growth, with stout trunk, form no forests of pure growth, but are found scattered in all the broad-leaved woods of our country, sometimes forming a considerable portion of the arborescent growth.

62. **White Elm** (*Ulmus americana*) (American elm, water elm): Medium to large sized tree, common. Maine to Minnesota, southward to Florida and Texas.

Digitized by Google

63. **Rock Elm** (*Ulmus racemosa*) (cork elm, hickory elm, white elm, cliff elm): Medium to large sized tree. Michigan, Ohio, from Vermont to Iowa, southward to Kentucky.
64. **Red Elm** (*Ulmus fulva*) (slippery elm, moose elm): Small-sized tree, found chiefly along water courses. New York to Minnesota, and southward to Florida and Texas.
65. **Cedar Elm** (*Ulmus crassifolia*): Small-sized tree, quite common. Arkansas and Texas.
66. **Winged Elm** (*Ulmus alata*) (wahoo): Small-sized tree, locally quite common. Arkansas, Missouri, and eastern Virginia.

GUM. — This general term refers to two kinds of wood usually distinguished as sweet or red gum, and sour, black, or tupelo gum, the former being a relative of the witch-hazel, the latter belonging to the dogwood family.

67. **Tupelo** (*Nyssa sylvatica*) (sour gum, black gum): Maine to Michigan, and southward to Florida and Texas. Wood heavy, hard, strong, tough, of fine texture frequently crossgrained, of yellowish or grayish white color, hard to split and work, troublesome in seasoning, warps and checks considerably, and is not durable if exposed; used for wagon hubs, wooden ware, handles, wooden shoes, etc. Medium to large sized trees, with straight, clear trunks; locally quite abundant, but never forming forests of pure growth.
68. **Tupelo Gum** (*Nyssa uniflora*) (cotton gum): Lower Mississippi basin, northward to Illinois and

Digitized by Google

eastward to Virginia, otherwise like preceding species.

69. **Sweet Gum** (*Liquidambar styraciflua*) (red gum, liquidambar, bilsted): Wood rather heavy, rather soft, quite stiff and strong, tough, commonly cross-grained, of fine texture; the broad sapwood whitish, the heartwood reddish brown; the wood shrinks and warps considerably, but does not check badly, stands well when fully seasoned, and takes good polish. Sweet gum is used in carpentry, in the manufacture of furniture, for cut veneer, for wooden plates, plaques, baskets, etc., also for wagon hubs, hat blocks, etc. A large-sized tree, very abundant, often the principal tree in the swampy parts of the bottoms of the lower Mississippi Valley; occurs from New York to Texas and from Indiana to Florida.

HACKBERRY.

70. **Hackberry** (*Celtis occidentalis*) (sugarberry): The handsome wood heavy, hard, strong, quite tough, of moderately fine texture, and greenish or yellowish white color; shrinks moderately, works well, and takes a good polish. So far but little used in the manufacture of furniture. Medium to large sized tree, locally quite common, largest in the lower Mississippi Valley; occurs in nearly all parts of the eastern United States.

HICKORY. — Wood very heavy, hard, and strong, proverbially tough, of rather coarse texture, smooth and of straight grain. The broad sapwood white, the heart reddish nut-brown. It dries slowly, shrinks

Digitized by Google

and checks considerably; is not durable in the ground, or if exposed, and, especially the sapwood, is always subject to the inroads of boring insects. Hickory excels as carriage and wagon stock, but is also extensively used in the manufacture of implements and machinery, for tool handles, timber pins, for harness work, and cooperage. The hickories are tall trees with slender stems, never form forests, occasionally small groves, but usually occur scattered among other broad-leaved trees in suitable localities. The following species all contribute more or less to the hickory of the markets: —

71. **Shagbark Hickory** (*Hicoria ovata*) (shellbark hickory): A medium to large sized tree, quite common; the favorite among hickories; best developed in the Ohio and Mississippi basins; from Lake Ontario to Texas, Minnesota to Florida.
72. **Mocker Nut Hickory** (*Hicoria alba*) (black hickory, bull and black nut, big bud, and white-heart hickory): A medium to large sized tree, with the same range as the foregoing; common, especially in the South.
73. **Pignut Hickory** (*Hicoria glabra*) (brown hickory, black hickory, switch-bud hickory): Medium to large sized tree, abundant; all eastern United States.
74. **Bitternut Hickory** (*Hicoria minima*) (swamp hickory): A medium-sized tree, favoring wet localities, with the same range as the preceding.
75. **Pecan** (*Hicoria pecan*) (Illinois nut): A large tree, very common in the fertile bottoms of the

Digitized by Google

Western streams. Indiana to Nebraska and southward to Louisiana and Texas.

HOLLY.

76. **Holly** (*Ilex opaca*): Wood of medium weight, hard, strong, tough, of fine texture and white color; works and stands well, used for cabinetwork and turnery. A small tree, most abundant in the lower Mississippi Valley and Gulf States, but occurring eastward to Massachusetts and north to Indiana.

HORSE-CHESTNUT. (*See* **Buckeye.**)

IRONWOOD. (*See* **Blue Beech.**)

LOCUST. — This name applies to both of the following:

77. **Black Locust** (*Robinia pseudacacia*) (black locust, yellow locust): Wood very heavy, hard, strong, and tough, of coarse texture, very durable in contact with the soil, shrinks considerably and suffers in seasoning; the very narrow sapwood yellowish, the heartwood brown, with shades of red and green. Used for wagon hubs, treenails or pins, but especially for ties, posts, etc. Abroad it is much used for furniture and farm implements and also in turnery. Small to medium sized tree, at home in the Alleghanies, extensively planted, especially in the West.

78. **Honey Locust** (*Gleditschia triacanthos*) (black locust, sweet locust, three-thorned acacia): Wood heavy, hard, strong, tough, of coarse texture, susceptible of a good polish, the narrow sapwood yellow, the heartwood brownish red. So far but little appreciated except for fencing and fuel; used to some extent for wagon hubs and in rough construction. A medium-sized tree, found from

Digitized by Google

Pennsylvania to Nebraska and southward to Florida and Texas; locally quite abundant.

MAGNOLIA. (*See* **Tulip Wood.**)

MAPLE. — Wood heavy, hard, strong, stiff, and tough, fine texture, frequently wavy-grained, this giving rise to "curly" and "blister" figures; not durable in the ground or otherwise exposed. Maple is creamy white, with shades of light brown in the heart; shrinks moderately, seasons, works, and stands well, wears smoothly, and takes a fine polish. The wood is used for ceiling, flooring, paneling, stairway, and other finishing lumber in house, ship, and car construction; it is used for the keels of boats and ships, in the manufacture of implements and machinery, but especially for furniture, where entire chamber sets of maple rival those of oak. Maple is also used for shoe lasts and other form blocks, for shoe pegs, for piano actions, for school apparatus, for wood type in show-bill printing, tool handles, in wood carving, turnery, and scroll work. The maples are medium-sized trees, of fairly rapid growth; sometimes form forests and frequently constitute a large proportion of the arborescent growth.

79. **Sugar Maple** (*Acer saccharum*) (hard maple, rock maple): Medium to large sized tree, very common, forms considerable forests. Maine to Minnesota, abundant, with birch, in parts of the pineries; southward to northern Florida; most abundant in the region of the Great Lakes.

80. **Red Maple** (*Acer rubrum*) (swamp or water maple): Medium-sized tree. Like the preceding, but scattered along water courses and other moist localities.

Digitized by Google

81. **Silver Maple** (*Acer saccharinum*) (soft maple, silver maple): Medium sized, common; wood lighter, softer, inferior to hard maple, and usually offered in small quantities and held separate in the market. Valley of the Ohio, but occurs from Maine to Dakota and southward to Florida.

82. **Broad-leafed Maple** (*Acer macrophyllum*): Medium-sized tree, forms considerable forests, and like the preceding has a lighter, softer, and less valuable wood. · Pacific Coast.

MULBERRY.

83. **Red Mulberry** (*Morus rubra*): Wood moderately heavy, hard, strong, rather tough, of coarse texture, durable; sapwood whitish, heart yellow to orange brown; shrinks and checks considerably in drying; works and stands well. Used in cooperage and locally in shipbuilding and in the manufacture of farm implements. A small-sized tree, common in the Ohio and Mississippi valleys, but widely distributed in the eastern United States.

OAK. — Wood very variable, usually very heavy and hard, very strong and tough, porous, and of coarse texture; the sapwood whitish, the heart "oak" brown to reddish brown. It shrinks and checks badly, giving trouble in seasoning, but stands well, is durable, and little subject to attacks of insects. Oak is used for many purposes: in shipbuilding, for heavy construction, in common carpentry, in furniture, car, and wagon work, cooperage, turnery, and even in wood carving; also in the manufacture of all kinds of farm implements, wooden mill machinery, for piles

Digitized by Google

and wharves, railway ties, etc. The oaks are medium to large sized trees, forming the predominant part of a large portion of our broad-leaved forests, so that these are generally "oak forests" though they always contain a considerable proportion of other kinds of trees. Three well-marked kinds, white, red, and live oak, are distinguished and kept separate in the market. Of the two principal kinds white oak is the stronger, tougher, less porous, and more durable. Red oak is usually of coarser texture, more porous, often brittle, less durable, and even more troublesome in seasoning than white oak. In carpentry and furniture work red oak brings about the same price at present as white oak. The red oaks everywhere accompany the white oaks, and, like the latter, are usually represented by several species in any given locality. Live oak, once largely employed in shipbuilding, possesses all the good qualities (except that of size) of white oak, even to a greater degree. It is one of the heaviest, hardest, and most durable building timbers of this country; in structure it resembles the red oaks, but is much less porous.

84. **White Oak** (*Quercus alba*): Medium to large sized tree, common in the Eastern States, Ohio and Mississippi valleys; occurs throughout eastern United States.

85. **Bur Oak** (*Quercus macrocarpa*) (mossy-cup oak, over-cup oak): Large-sized tree, locally abundant, common. Bottoms west of Mississippi; range farther west than preceding.

86. **Swamp White Oak** (*Quercus bicolor*): Large-sized

Digitized by Google

tree, common. Most abundant in the Lake States, but with range as in white oak.

87. **Yellow Oak** (*Quercus prinoides* (chestnut oak, chinquapin oak): Medium-sized tree. Southern Alleghanies, eastward to Massachusetts.
88. **Basket Oak** (*Quercus michauxii*) (cow oak): Large-sized tree, locally abundant; lower Mississippi and eastward to Delaware.
89. **Over-cup Oak** (*Quercus lyrata*) (swamp white oak, swamp post oak): Medium to large sized tree, rather restricted; ranges as in the preceding.
90. **Post Oak** (*Quercus obtusiloba*) (iron oak): Medium to large sized tree. Arkansas to Texas, eastward to New England and northward to Michigan.
91. **White Oak** (*Quercus durandii*): Medium to small sized tree. Texas, eastward to Alabama.
92. **White Oak** (*Quercus garryana*): Medium to large sized tree. Washington to California.
93. **White Oak** (*Quercus lobata*): Medium to large sized tree; largest oak on the Pacific Coast; California.
94. **Red Oak** (*Quercus rubra*) (black oak): Medium to large sized tree; common in all parts of its range. Maine to Minnesota, and southward to the Gulf.
95. **Black Oak** (*Quercus tinctoria*) (yellow oak): Medium to large sized tree; very common in the Southern States, but occurring north as far as Minnesota, and eastward to Maine.
96. **Spanish Oak** (*Quercus falcata*) (red oak): Medium-sized tree, common in the South Atlantic and Gulf region, but found from Texas to New York, and north to Missouri and Kentucky.

Digitized by Google

97. **Scarlet Oak** (*Quercus coccinea*): Medium to large sized tree; best developed in the lower basin of the Ohio, but found from Maine to Missouri, and from Minnesota to Florida.
98. **Pin Oak** (*Quercus palustris*) (swamp Spanish oak, water oak): Medium to large sized tree, common along borders of streams and swamps. Arkansas to Wisconsin, and eastward to the Alleghanies.
99. **Willow Oak** (*Quercus phellos*) (peach oak): Small to medium sized tree. New York to Texas, and northward to Kentucky.
100. **Water Oak** (*Quercus aquatica*) (duck oak, possum oak, punk oak): Medium to large sized tree, of extremely rapid growth. Eastern Gulf States, eastward to Delaware, and northward to Missouri and Kentucky.
101. **Live Oak** (*Quercus virens*): Small-sized tree, scattered along the coast from Virginia to Texas.
102. **Live Oak** (*Quercus chrysolepis*) (maul oak, Valparaiso oak): Medium-sized tree; California.

OSAGE ORANGE.

103. **Osage Orange** (*Maclura aurantiaca*) (Bois d'Arc): Wood very heavy, exceedingly hard, strong, not tough, of moderately coarse texture, and very durable; sapwood yellow, heart brown on the end, yellow on longitudinal faces, soon turning grayish brown if exposed; it shrinks considerably in drying, but once dry it stands unusually well. Formerly much used for wheel stock in the dry regions of Texas; otherwise employed for posts, railway ties, etc. Seems too little appreciated; it is well suited for

Digitized by Google

turned ware and especially for wood carving. A small-sized tree, of fairly rapid growth, scattered through the rich bottoms of Arkansas and Texas.

PERSIMMON.

104. **Persimmon** (*Diospyros virginiana*): Wood very heavy and hard, strong and tough; resembles hickory, but is of finer texture; the broad sapwood cream color, the heart black; used in turnery for shuttles, plane stocks, shoe lasts, etc. Small to medium sized tree, common and best developed in the lower Ohio Valley, but occurs from New York to Texas and Missouri.

POPLAR and COTTONWOOD (*see also* **Tulip Wood**). — Wood light, very soft, not strong, of fine texture, and whitish, grayish, to yellowish color, usually with a satiny luster. The wood shrinks moderately (some crossgrained forms warp excessively) but checks little; is easily worked but is not durable. Used as building and furniture lumber, in cooperage for sugar and flour barrels, for crates and boxes (especially cracker boxes), for wooden ware and paper pulp.

105. **Cottonwood** (*Populus monilifera*): Large-sized tree; forms considerable forests along many of the Western streams, and furnishes most of the cottonwood of the market. Mississippi Valley and west; New England to the Rocky Mountains.

106. **Balsam** (*Populus balsamifera*) (balm of Gilead): Medium to large sized tree; common all along the northern boundary of the United States.

107. **Black Cottonwood** (*Populus trichocarpa*): The largest deciduous tree of Washington; very com-

Digitized by Google

mon. Northern Rocky Mountains and Pacific region.

108. **Cottonwood** (*Populus fremontii* var. *wislizeni*): Medium to large sized tree, common. Texas to California.

109. **Poplar** (*Populus grandidentata*): Medium-sized tree, chiefly used for pulp. Maine to Minnesota and southward along the Alleghanies.

110. **Aspen** (*Populus tremuloides*): Small to medium sized tree, often forming extensive forests and covering burned areas. Maine to Washington and northward, south in the Western mountains to California and New Mexico.

RED GUM. (*See* **Gum.**)

SASSAFRAS.

111. **Sassafras** (*Sassafras sassafras*): Wood light, soft, not strong, brittle, of coarse texture, durable; sapwood yellow, heart orange brown. Used in cooperage, for skiffs, fencing, etc. Medium-sized tree, largest in the lower Mississippi Valley, from New England to Texas and from Michigan to Florida.

SOUR GUM. (*See* **Gum.**)

SWEET GUM. (*See* **Gum.**)

SYCAMORE.

112. **Sycamore** (*Platanus occidentalis*) (buttonwood, buttonball tree, water beech): Wood moderately heavy, quite hard, stiff, strong, tough, usually cross-grained, of coarse texture, and white to light brown color; the wood is hard to split and work, shrinks moderately, warps and checks considerably, but stands well. It is used extensively for drawers,

Digitized by Google

backs, bottoms, etc., in cabinetwork, for tobacco boxes, in cooperage, and also for finishing lumber, where it has too long been underrated. A large tree, of rapid growth, common and largest in the Ohio and Mississippi valleys, at home in nearly all parts of the eastern United States. The California species —

113. *Platanus racemosa* resembles in its wood the Eastern form.

TULIP WOOD.

114. **Tulip Tree** (*Liriodendron tulipifera*) (yellow poplar, white wood): Wood quite variable in weight, usually light, soft, stiff but not strong, of fine texture, and yellowish color; the wood shrinks considerably, but seasons without much injury; works and stands remarkably well. Used for siding, for paneling and finishing lumber in house, car, and ship building, for sideboards, and panels of wagons and carriages; also in the manufacture of furniture, implements and machinery, for pump logs, and almost every kind of common wooden ware, boxes, shelving, drawers, etc. An ideal wood for the carver and toy man. A large tree, does not form forests, but is quite common, especially in the Ohio Basin; occurs from New England to Missouri and southward to Florida.

115. **Cucumber Tree** (*Magnolia acuminata*): A medium-sized tree, most common in the southern Alleghanies, but distributed from New York to Arkansas, southward to Alabama and northward to Illinois. Resembling, and probably confounded with, tulip wood in the markets.

Digitized by Google

TUPELO. (*See* **Gum.**)

WALNUT.

116. **Black Walnut** (*Juglans nigra*): Wood heavy, hard, strong, of coarse texture; the narrow sapwood whitish, the heartwood chocolate brown. The wood shrinks moderately in drying, works and stands well, takes a good polish, is quite handsome, and has been for a long time the favorite cabinet wood in this country. Walnut, formerly used even for fencing, has become too costly for ordinary uses, and is today employed largely as a veneer, for inside finish and cabinetwork; also in turnery, for gunstocks, etc. Black walnut is a large tree, with stout trunk, of rapid growth, and was formerly quite abundant throughout the Alleghany region, occurring from New England to Texas, and from Michigan to Florida.

WHITE WALNUT. (*See* **Butternut.**)

WHITE WOOD. (*See* **Tulip**, and also **Basswood.**)

YELLOW POPLAR. (*See* **Tulip.**)

Digitized by Google

APPENDIX B

Problems in Construction and Geometric Helps

The order of the letters and figures in the following indicates the order of construction and of reasoning in discussing the figures.

Digitized by Google

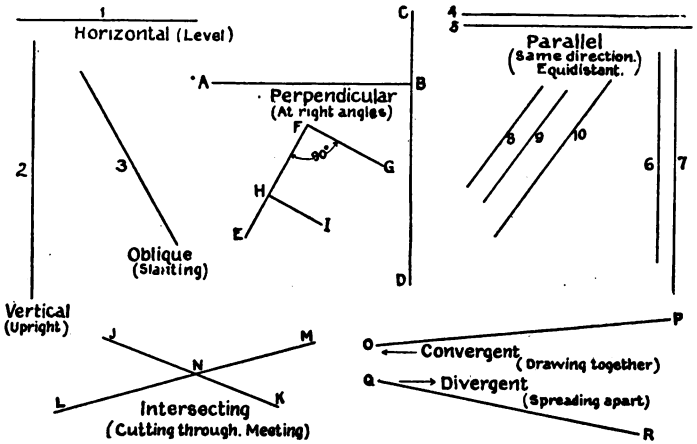

FIG. 247. — Direction of lines.

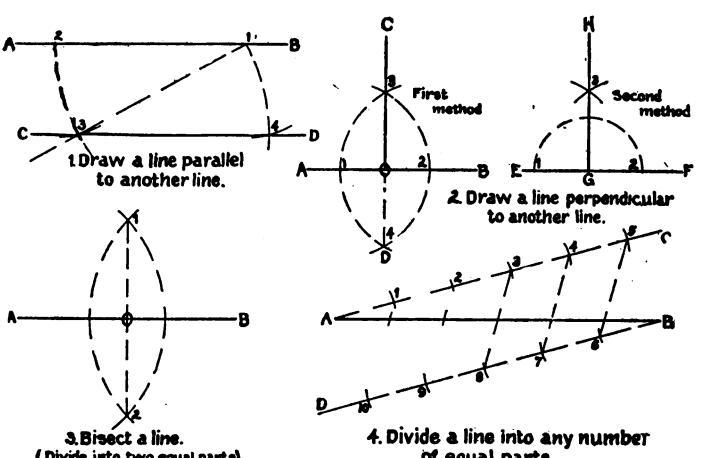

FIG. 248. — Line construction.

Digitized by Google

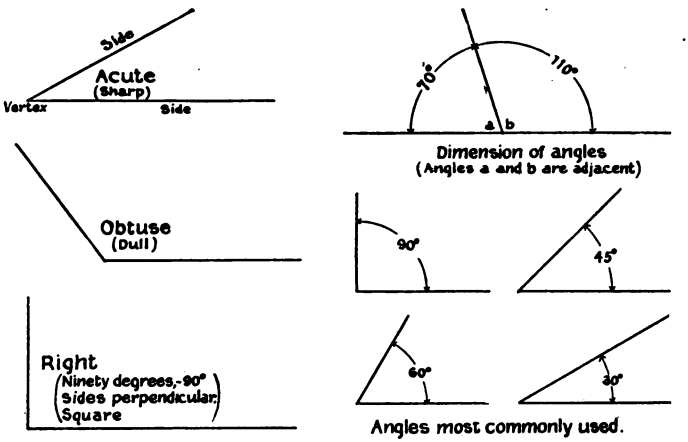

FIG. 249. — Angles.

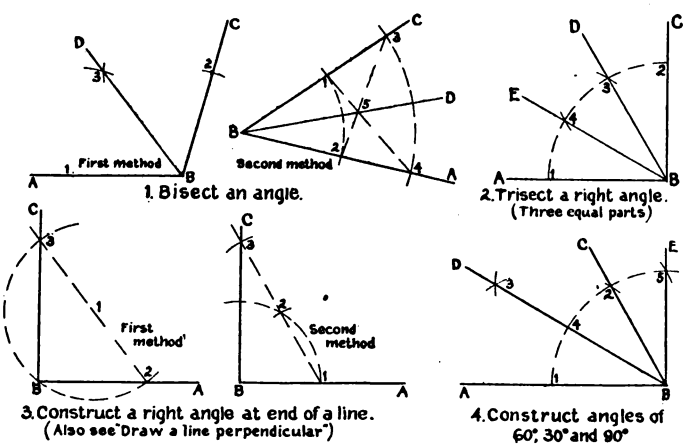

FIG. 250. — Divisions and constructions of angles.

Digitized by Google

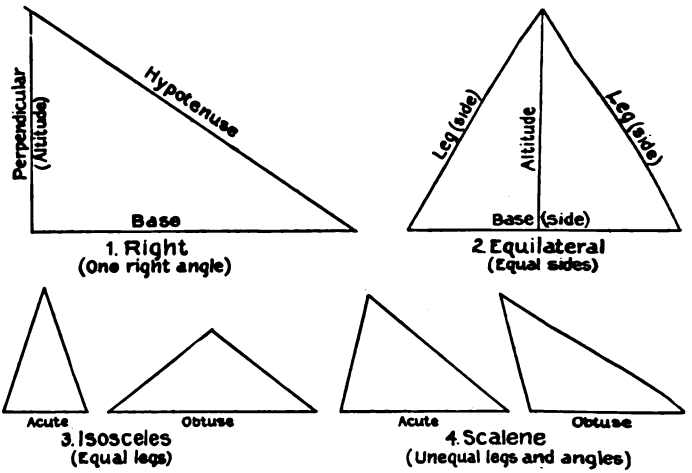

FIG. 251. — Triangles.

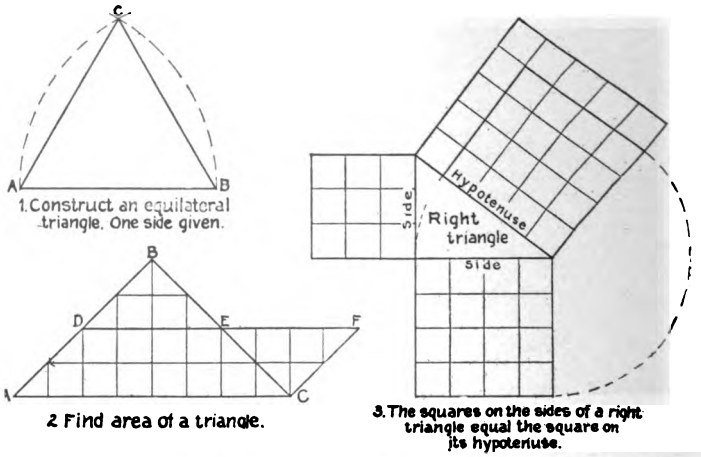

FIG. 252. — Construction and area of triangles.

Digitized by Google

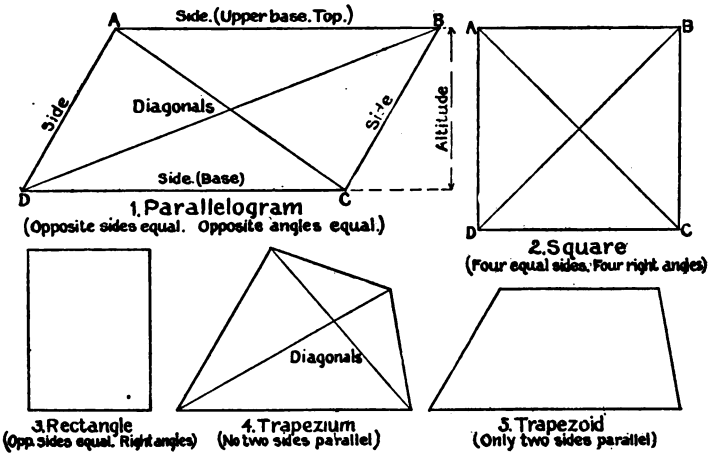

FIG. 253. — Quadrilaterals.

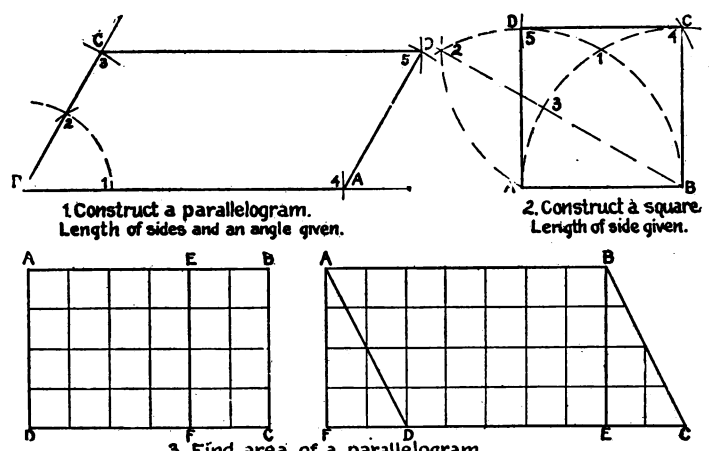

FIG. 254. — Construction and area of quadrilaterals.

Digitized by Google

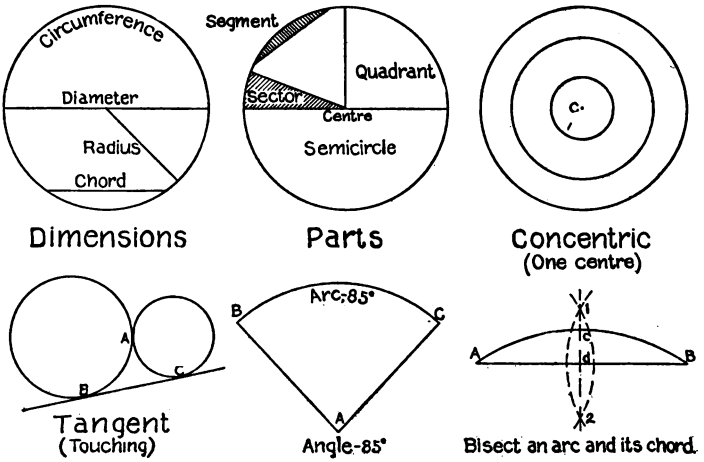

FIG. 255.—Circles.

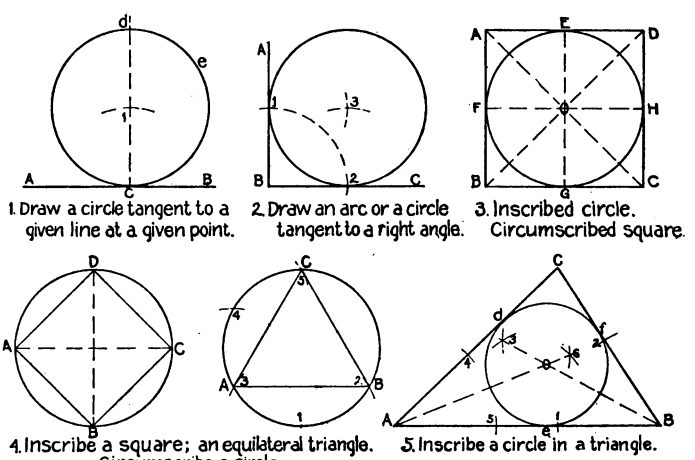

FIG. 256.—Construction of circles.

Digitized by Google

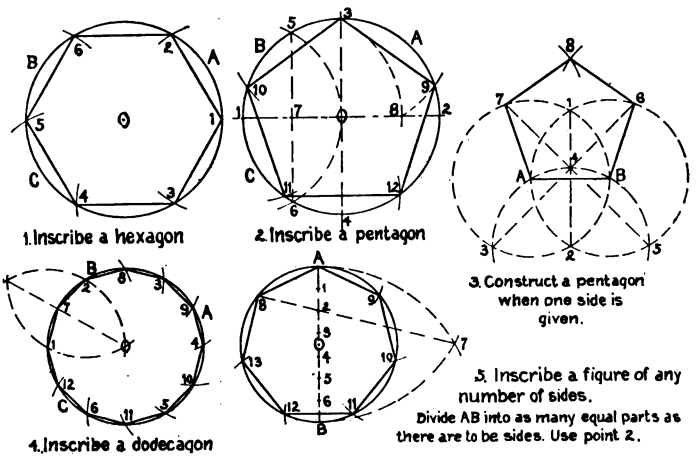

FIG. 257. — Regular polygons.

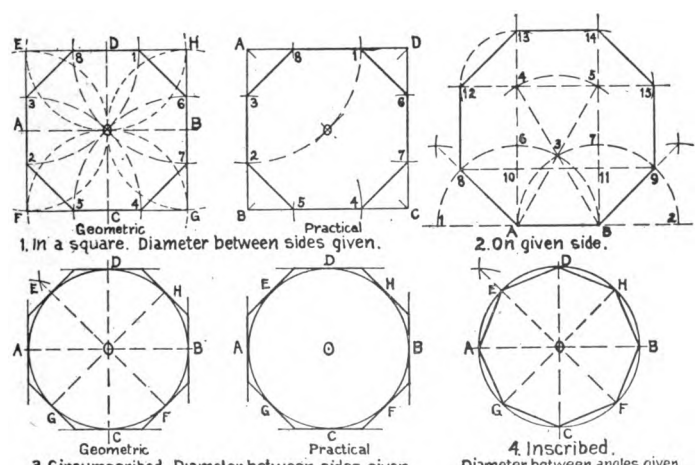

FIG. 258. — The octagon.

Digitized by Google

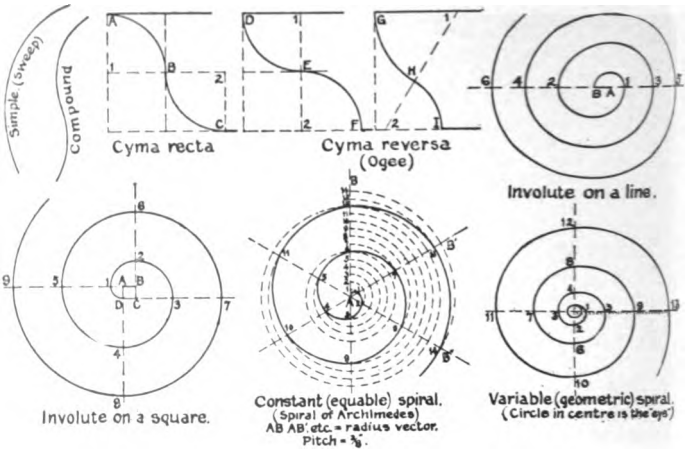

FIG. 259. — Curves and spirals.

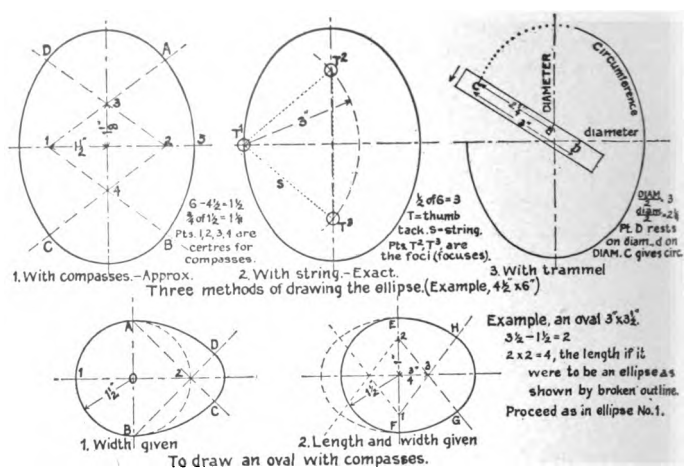

FIG. 260. — Ellipse and oval.

Digitized by Google

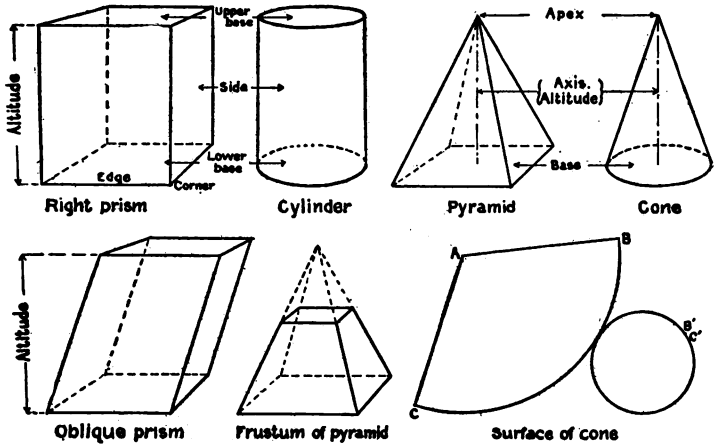

FIG. 261. — Solids.

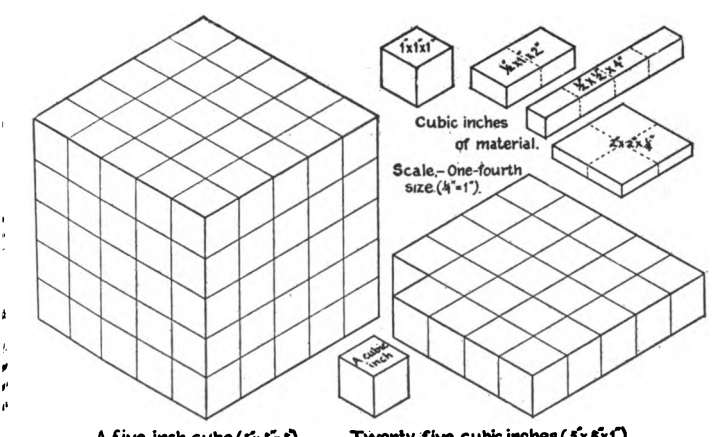

FIG. 262. — The cube.

Digitized by Google

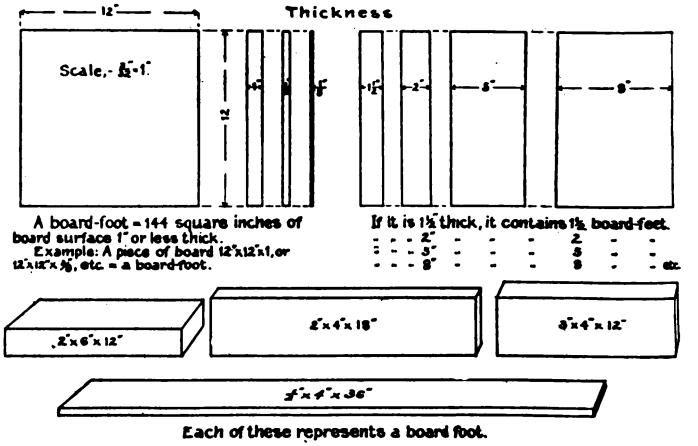

FIG. 263.—Board measure.

Digitized by Google

APPENDIX C

Useful Tables

U. S. WEIGHTS AND MEASURES

LONG MEASURE (Measures of Length)

Ins.	Feet	Yards	Fath.	Rods	Furl.	Mile
12 =	1					
36 =	3 =	1				
72 =	6 =	2 =	1			
198 =	16½ =	5½ =	2¾ =	1		
7920 =	660 =	220 =	110 =	40 =	1	
63360 =	5280 =	1760 =	880 =	320 =	8 =	1

6080 26 Feet = 1.15 Statute Miles = 1 Nautical Mile or Knot.

SQUARE MEASURE (Measures of Surface)

Sq. Ins.	Sq. Feet	Sq. Yards	Sq. Rods	Roods	Acre
144 =	1				
1296 =	9 =	1			
39204 =	272¼ =	30¼ =	1		
1568160 =	10890 =	1210 =	40 =	1	
6272640 =	43560 =	4840 =	160 =	4 =	1

640 Acres = 1 Square Mile.
An Acre = a square whose side is 69.57 Yards or 208.71 Feet.

CUBIC MEASURE (Measures of Volume)

Cu. Ins.	Cu. Feet	Cu. Yard
1728 =	1	
46656 =	27 =	1

A Cord of Wood = 128 Cubic Feet, being 4 feet × 4 feet × 8 feet.
42 Cubic Feet = a Ton of Shipping.
1 Perch of Masonry = 24¾ Cubic Feet, being 16½ feet × 1½ feet × 1 foot.

Digitized by Google

LIQUID OR WINE MEASURE

The U. S. Standard Gallon measures 231 Cubic Inches, or 8.33888 Pounds Avoirdupois of pure water, at about 39.85 degrees Fahr., the Barometer at 30 Inches.

Gills	Pints	Quarts	Gallons	Tierces	Hogsheads	Puncheons	Pipes	Tun	Cubic Inches
4 =	1 =								28.375
8 =	2 =	1 =							57.75
32 =	8 =	4 =	1 =						**231.**
1344 =	336 =	168 =	42 =	1					
2016 =	504 =	252 =	63 =	1⅓ =	1				
2488 =	672 =	336 =	84 =	2 =	1⅓ =	1			
4032 =	1008 =	504 =	126 =	3 =	2 =	1½ =	1		
8064 =	2016 =	1008 =	252 =	6 =	4 =	3 =	2 =	1	

A Cubic Foot contains 7½ Gallons.

The British Imperial Gallon contains 277.27 Cubic Inches and = 1.2 U. S. Gallons.

DRY MEASURE

The Standard Bushel contains 2150.42 Cubic Inches, or 77.627013 Pounds Avoirdupois of pure water at maximum density. Its legal dimensions are 18½ Inches diameter inside, 19½ Inches outside, and 8 Inches deep; and when heaped the cone must be 6 Inches high, making a heaped Bushel equal to 1¼ struck ones.

Pints	Quarts	Gallons	Pecks	Bushel	Cubic Inches
2 =	1 =				67.2
8 =	4 =	1 =			268.8
16 =	8 =	2 =	1 =		537.6
64 =	32 =	8 =	4 =	1 =	2150.42

The British Imperial Bushel contains 2218.2 Cubic Inches and = 1.03 U. S. Bushels.

AVOIRDUPOIS OR COMMERCIAL WEIGHT

The Grain is the same in Troy, Apothecaries, and Avoirdupois Weights.

The Standard Avoirdupois Pound is the weight of 27.7015 Cubic Inches of distilled water weighed in the air at 35.85 degrees Fahr., Barometer at 30 Inches. 27.343 Grains = 1 Drachm.

Digitized by Google

Drachms		Ozs.		Lbs.		Long Qrs.		Long Cwt.		Long Ton
16	=	1								
256	=	16	=	1						
7168	=	448	=	28	=	1				
28672	=	1792	=	112	=	4	=	1		
573440	=	35840	=	2240	=	80	=	20	=	1

The above Table gives what is known as the Long Ton. The Short Ton weighs 2000 Pounds.

TROY WEIGHT

For Gold, Silver, and Precious Metals.

Grains		Dwts.		Ozs.		Lb.
24	=	1				
480	=	20	=	1		
5760	=	240	=	12	=	1

175 Pounds Troy = 144 Avoirdupois.
Pounds Avoirdupois ÷ .82286 = Pounds Troy.
Pounds Troy × 1.2153 = Pounds Avoirdupois.

The Jewelers' Carat is equal, in the United States, to 3.2 Grains; in London, to 3.17 Grains; in Paris, to 3.18 Grains.

APOTHECARIES WEIGHT

United States and British.

In Troy and Apothecaries Weights, the Grain, Ounce, and Pound are the same.

Grams		Scruples		Drachms		Ozs.		Lb.
20	=	1						
60	=	3	=	1				
480	=	24	=	8	=	1		
5760	=	288	=	96	=	12	=	1

Digitized by Google

THE METRIC SYSTEM

WEIGHTS

Metric Denominations and Values. Names.	No. Grams.	Equivalents in Denominations in use. Weight of what quantity of water at maximum density.	Avoirdupois Weight.
Millier or tonneau	= 1,000,000	= 1 cubic meter	= 2204.6 pounds
Quintal	= 100,000	= 1 hectoliter	= 220.46 pounds
Myriagram	= 10,000	= 10 liters	= 22.046 pounds
Kilogram or kilo	= 1,000	= 1 liter	= 2.2046 pounds
Hectogram	= 100	= 1 deciliter	= 3.5274 ounces
Dekagram	= 10	= 10 c. centimeters	= 0.3527 ounce
Gram	= 1	= 1 c. centimeter	= 15.432 grains
Decigram	= .1	= .1 c. centimeter	= 1.5432 grains
Centigram	= .01	= 10 c. millimeters	= 0.1543 grain
Milligram	= .001	= 1 c. millimeter	= 0.0154 grain

MEASURES OF LENGTH

Metric Denominations and Values.		Equivalents in Denominations in use.
Myriameter	= 10,000 meters	= 6.2137 miles
Kilometer	= 1,000 meters	= 0.62137 mile, or 3,280 feet 10 in.
Hectometer	= 100 meters	= 328 feet and 1 inch
Dekameter	= 10 meters	= 393.7 inches
Meter	= 1 meter	= 39.37 inches
Decimeter	= .1 of a meter	= 3.937 inches
Centimeter	= .01 of a meter	= 0.3937 inch
Millimeter	= .001 of a meter	= 0.0394 inch

MEASURES OF SURFACE

Metric Denominations and Values.		Equivalents in Denominations in use.
Hectare	= 10,000 square meters	= 2.471 acres
Are	= 100 square meters	= 119.6 square yards
Centare	= 1 square meter	= 1.550 square inches

MEASURES OF CAPACITY

Metric Denominations and Values. Names	No. Liters	Cubic Measure	Equivalents in Denominations in use. Dry Measure	Wine Measure
Kiloliter	= 1,000	= 1 cubic meter	= 1.308 cubic yards	= 264.17 gallons
Hectoliter	= 100	= .1 cubic meter	= 2 bush. 3.35 pecks	= 26.417 gallons
Decaliter	= 10	= 10 c. decimeters	= 9.08 quarts	= 2.6417 gallons
Liter	= 1	= 1 c. decimeter	= 0.908 quart	= 1.0567 quarts
Deciliter	= .1	= .1 c. decimeter	= 6.1022 cubic inches	= 0.845 gill
Centiliter	= .01	= 10 c. centimeters	= 0.6102 cubic inch	= 0.338 fluid oz.
Milliliter	= .001	= 1 c. centimeter	= 0.061 cubic inch	= 0.27 fluid dr.

Digitized by Google

"UNITED STATES" AND "METRIC" CONSTANTS

LONG MEASURE

Millimeters	×	.03937	=	inches
Millimeters	÷	25.4	=	inches
Centimeters	×	.3937	=	inches
Centimeters	÷	2.54	=	inches
Meters	=	39.37	=	inches (Act of Congress)
Meters	×	3.281	=	feet
Meters	×	1.094	=	yards
Kilometers	×	.621	=	miles
Kilometers	÷	3280.7	=	feet
Kilometers	÷	1.6093	=	miles

SQUARE MEASURE

Square millimeters	×	.0155	=	square inches
Square millimeters	÷	645.1	=	square inches
Square centimeters	×	1.55	=	square inches
Square centimeters	÷	6.451	=	square inches
Square meters	×	10.764	=	square feet
Square kilometers	×	247.1	=	acres
Hectares	×	2.471	=	acres

CUBIC MEASURE

Cubic centimeters	÷	16.383	=	cubic inches
Cubic centimeters	÷	3.69	=	fluid drachms (U. S. P.)
Cubic centimeters	÷	29.57	=	fluid ounces (U. S. P.)
Cubic meters	×	35.315	=	cubic feet
Cubic meters	×	1.308	=	cubic yards
Cubic meters	×	264.2	=	gallons (231 cubic inches)

LIQUID MEASURE

Liters	×	61.022	=	cubic inches (Act of Congress)
Liters	×	33.84	=	fluid ounces (U. S. Phar.)
Liters	×	.2642	=	gallons (231 cubic inches)
Liters	÷	3.78	=	gallons (231 cubic inches)
Liters	×	28.316	=	cubic feet
Hectoliters	×	3.531	=	cubic feet
Hectoliters	×	2.84	=	bushels (2150.42 cubic inches)
Hectoliters	×	.131	=	cubic yards
Hectoliters	÷	26.42	=	gallons (231 cubic inches)

Digitized by Google

WEIGHTS

Grammes × 15.432 = grains (Act of Congress)
Grammes × 981 = dynes
Grammes (water) ÷ 29.57 = fluid ounces
Grammes ÷ 28.35 = ounces avoirdupois
Grammes per cubic centimeter ÷ 27.7 = pounds per cubic inch
Joule × .7373 = foot pounds
Kilograms × 2.2046 = pounds
Kilograms × 35.3 = ounces avoirdupois
Kilograms ÷ 1102.3 = tons (2,000 pounds)
Kilograms × per square centimeter 14.223 = pounds per square inch

CONTENTS (BOARD MEASURE)

OF ONE LINEAL FOOT OF TIMBER

Width in Inches	Thickness in Inches												
	2	3	4	5	6	7	8	9	10	11	12	13	14
18	3.	4.5	6.	7.5	9	10.5	12	13.5	15	16.5	18	19.5	21
17	2.83	4.25	5.66	7.08	8.5	9.92	11.33	12.75	14.17	15.58	17	18.42	19.83
16	2.67	4	5.33	6.67	8	9.33	10.67	12	13.33	14.67	16	17.33	18.66
15	2.5	3.75	5	6.25	7.5	8.75	10	11.25	12.5	13.75	15	16.25	17.5
14	2.33	3.5	4.67	5.83	7	8.17	9.33	10.5	11.67	12.83	14	15.17	16.33
13	2.17	3.25	4.33	5.42	6.5	7.58	8.67	9.75	10.83	11.92	13	14.08	
12	2	3	4	5	6	7	8	9	10	11	12		
11	1.83	2.75	3.67	4.58	5.5	6.42	7.33	8.25	9.17	10.08			
10	1.67	2.5	3.33	4.17	5	5.83	6.67	7.5	8.33				
9	1.5	2.25	3	3.75	4.5	5.25	6	6.75					
8	1.33	2	2.67	3.33	4	4.67	5.33						
7	1.17	1.75	2.33	2.92	3.5	4.08							
6	1	1.5	2	2.5	3								
5	.83	1.25	1.67	2.08									
4	.67	1	1.33										
3	.5	.75											
2	.33												

To ascertain the contents of a piece of timber, find in the table the contents of one foot and multiply by the length, in feet, of the piece.

Digitized by Google

EXAMPLE: What is the Contents (Board Measure) of a piece of timber 10 in. × 7 in., 20 ft. long?

ANSWER: 5.83 × 20 = 116.6 feet Board Measure.

PROPERTIES OF TIMBER

DESCRIPTION	WEIGHT PER CUBIC FOOT IN LBS.	TENSILE STRENGTH PER SQ. IN. IN LBS.	CRUSHING STRENGTH PER SQ. IN. IN LBS.	RELATIVE STRENGTH FOR CROSS BREAKING. WHITE PINE EQUAL 100	SHEARING STRENGTH WITH THE GRAIN. LBS. PER SQ. IN.
Ash	43 to 55.8	11,000 to 17,207	4,400 to 9,363	130 to 180	458 to 700
Beech . . .	43 to 53.4	11,500 to 18,000	5,800 to 9,363	100 to 144	—
Cedar . . .	50 to 56.8	10,300 to 11,400	5,600 to 6,000	55 to 63	—
Cherry . .	—	—	—	130	—
Chestnut .	33	10,500	5,350 to 5,600	96 to 133	—
Elm . . .	34 to 36.7	15,400 to 13,489	6,831 to 10,331	96	—
Hemlock .	—	8,700	5,700	88 to 95	—
Hickory .	—	12,800 to 18,000	8,925	150 to 210	—
Locust . .	44	20,500 to 24,800	9,113 to 11,700	132 to 227	—
Maple . .	49	10,500 to 10,584	8,150	122 to 220	367 to 647
Oak, white	45 to 54.5	10,253 to 19,500	4,684 to 9,509	130 to 177	752 to 966
Oak, live .	70	—	6,850	155 to 189	—
Pine, white	30	10,000 to 12,000	5,000 to 6,650	100	225 to 423
Pine, yellow .	28.8 to 33	12,600 to 19,200	5,400 to 9,500	98 to 170	286 to 415
Spruce . .	—	10,000 to 19,500	5,050 to 7.850	86 to 110	253 to 374
Walnut, black . .	42	9,286 to 16,000	7,500	—	—

The above table should be taken with caution, as there is often very wide variations in any species.

CUT NAILS AND TACKS

THE TERM "PENNY" AS APPLIED TO NAILS

The origin of the terms "six-penny," "ten-penny," etc., as applied to nails, though not commonly known, is involved in no mystery whatever. Nails have been made a certain number of pounds to the

Digitized by Google

thousand for many years, and are still reckoned in that way in England, a ten-penny being a thousand nails to ten pounds, a six-penny a thousand nails to six pounds, a twenty-penny weighing twenty pounds to the thousand; and, in ordering, buyers call for the three-pound, six-pound, or ten-pound variety, etc., until, by the Englishman's abbreviation of "pun" for "pound," the abbreviation has been made to stand for penny, instead of pound, as originally intended.

LENGTH AND NUMBER OF CUT NAILS TO THE POUND

Size	Length	Common	Clinch	Fence	Finishing	Fine	Barrel	Casing	Brads	Tobacco	Cut Spikes
¾ . .	¾ in.	—	—	—	—	—	800	—	—	—	—
⅞ . .	⅛	—	—	—	—	—	500	—	—	—	—
2d .	1	800	—	—	1100	1100	376	—	—	—	—
3d .	1¼	480	—	—	720	760	224	—	—	—	—
4d .	1½	288	—	—	523	368	180	398	—	—	—
5d .	1¾	200	—	—	410	—	—	—	—	130	—
6d .	2	168	96	84	268	—	—	224	126	96	—
7d .	2¼	124	74	64	188	—	—	—	98	82	—
8d .	2½	88	62	48	146	—	—	128	75	68	—
9d .	2¾	70	53	36	130	—	—	110	65	—	—
10d .	3	58	46	30	102	—	—	91	55	—	28
12d .	3¼	44	42	24	76	—	—	71	40	—	—
16d .	3½	34	38	20	62	—	—	54	27	—	22
20d .	4	23	33	16	54	—	—	40	—	—	14½
30d .	4½	18	20	—	—	—	—	33	—	—	12½
40d .	5	14	—	—	—	—	—	27	—	—	9½
50d .	5½	10	—	—	—	—	—	—	—	—	8
60d .	6	8	—	—	—	—	—	—	—	—	6
—	6½	—	—	—	—	—	—	—	—	—	5½
—	7	—	—	—	—	—	—	—	—	—	4½
—	8	—	—	—	—	—	—	—	—	—	2½

Digitized by Google

TABLE FOR ESTIMATING QUANTITY OF NAILS

Material	Size of Nail	Lbs. Required
1000 shingles	4d	5
1000 laths	3d	7
1000 sq. ft. beveled siding	6d	18
1000 sq. ft. sheathing	8d	20
1000 sq. ft. sheathing	10d	25
1000 sq. ft. flooring	8d	30
1000 sq. ft. flooring	10d	40
1000 sq. ft. studding	10d	15
1000 sq. ft. studding	20d	5
1000 sq. ft. furring 1 × 2 in.	10d	10
1000 sq. ft. finished flooring, $\frac{7}{8}$ in.	8d to 10d fin.	20
1000 sq. ft. finished flooring, $1\frac{1}{2}$ in.	10d fin.	30

TABLE OF DECIMAL EQUIVALENTS OF SCREW GAUGE

FOR MACHINE AND WOOD SCREWS

The difference between consecutive sizes is .01316″.

No. of Screw Gauge	Size of Number in Decimals	No. of Screw Gauge	Size of Number in Decimals	No. of Screw Gauge	Size of Number in Decimals
000	.03152	16	.26840	34	.50528
00	.04486	17	.28156	35	.51844
0	.05784	18	.29472	36	.53160
1	.07100	19	.30788	37	.54476
2	.08416	20	.32104	38	.55792
3	.09732	21	.33420	39	.57108
4	.11048	22	.34736	40	.58424
5	.12364	23	.36052	41	.59740
6	.13680	24	.37368	42	.61056
7	.14996	25	.38864	43	.62372
8	.16312	26	.40000	44	.63688
9	.17628	27	.41316	45	.65004
10	.18944	28	.42632	46	.66320
11	.20260	29	.43948	47	.67636
12	.21576	30	.45264	48	.68952
13	.22892	31	.46580	49	.70268
14	.24208	32	.47896	50	.71584
15	.25524	33	.49212		

Digitized by Google

DIFFERENT STANDARDS FOR WIRE GAUGE IN USE IN THE UNITED STATES

DIMENSIONS OF SIZES IN DECIMAL PARTS OF AN INCH

Number of Wire Gauge	American or Brown & Sharpe	Birmingham, or Stubs' Wire	Washburn & Moen Mfg. Co's Worcester, Ms.	Imperial Wire Gauge	Stubs' Steel Wire	U. S. Stand. for Plate	Number of Wire Gauge
000000	—	—	—	.464	—	.46875	000000
00000	—	—	—	.432	—	.4375	00000
0000	.46	.454	.3938	.400	—	.40625	0000
000	.40964	.425	.3625	.372	—	.375	000
00	.3648	.38	.3310	.348	—	.34375	00
0	.32486	.34	.3065	.324	—	.3125	0
1	.2893	.3	.2830	.300	.227	.28125	1
2	.25763	.284	.2625	.276	.219	.265625	2
3	.22942	.259	.2437	.252	.212	.25	3
4	.20431	.238	.2253	.232	.207	.234375	4
5	.18194	.22	.2070	.212	.204	.21875	5
6	.16202	.203	.1920	.192	.201	.203125	6
7	.14428	.18	.1770	.176	.199	.1875	7
8	.12849	.165	.1620	.160	.197	.171875	8
9	.11443	.148	.1483	.144	.194	.15625	9
10	.10189	.134	.1350	.128	.191	.140625	10
11	.090742	.12	.1205	.116	.188	.125	11
12	.080808	.109	.1055	.104	.185	.109375	12
13	.071961	.095	.0915	.092	.182	.09375	13
14	.064084	.083	.0800	.080	.180	.078125	14
15	.057068	.072	.0720	.072	.178	.0703125	15
16	.05082	.065	.0625	.064	.175	.0625	16
17	.045257	.058	.0540	.056	.172	.05625	17
18	.040303	.049	.0475	.048	.168	.05	18
19	.03589	.042	.0410	.040	.164	.04375	19
20	.031961	.035	.0348	.036	.161	.0375	20
21	.028462	.032	.03175	.032	.157	.034375	21
22	.025347	.028	.0286	.028	.155	.03125	22
23	.022571	.025	.0258	.024	.153	.028125	23

Digitized by Google

DIFFERENT STANDARDS FOR WIRE GAUGE IN USE IN THE UNITED STATES — *Continued*

DIMENSIONS OF SIZES IN DECIMAL PARTS OF AN INCH

Number of Wire Gauge	American or Brown & Sharpe	Birmingham, or Stubs' Wire	Washburn & Moen Mfg. Co's Worcester, Ms.	Imperial Wire Gauge	Stubs' Steel Wire	U. S. Stand. for Plate	Number of Wire Gauge
24	.0201	.022	.0230	.022	.151	.025	24
25	.0179	.02	.0204	.020	.148	.021875	25
26	.01594	.018	.0181	.018	.146	.01875	26
27	.014195	.016	.0173	.0164	.143	.0171875	27
28	.012641	.014	.0162	.0149	.139	.015625	28
29	.011257	.013	.0150	.0136	.134	.0140625	29
30	.010025	.012	.0140	.0124	.127	.0125	30
31	.008928	.01	.0132	.0116	.120	.0109375	31
32	.00795	.009	.0128	.0108	.115	.01015625	32
33	.00708	.008	.0118	.0100	.112	.009375	33
34	.006304	.007	.0104	.0092	.110	.00859375	34
35	.005614	.005	.0095	.0084	.108	.0078125	35
36	.005	.004	.0090	.0076	.106	.00703125	36
37	.004453	—	—	.0068	.103	.006640625	37
38	.003965	—	—	.0060	.101	.00625	38
39	.003531	—	—	.0052	.099	—	39
40	.003144	—	—	.0048	.097	—	40

SIZES OF NUMBERS OF THE U. S. STANDARD GAUGE

FOR SHEET AND PLATE IRON AND STEEL

An Act Establishing a Standard Gauge for Sheet and Plate Iron and Steel

Be it enacted by the Senate and House of Representatives of the United States of America in Congress assembled:

That for the purpose of securing uniformity the following is established as the only gauge for sheet and plate iron and steel in the United States of America, namely:

Digitized by Google

Number of Gauge	Approximate Thickness in Fractions of an Inch	Approximate Thickness in Decimal Parts of an Inch	Weight per Square Foot in Ounces Avoirdupois	Weight per Square Foot in Pounds Avoirdupois
0000000	1–2	.5	320	20.00
000000	15–32	.46875	300	18.75
00000	7–16	.4375	280	17.50
0000	13–32	.40625	260	16.25
000	3–8	.375	240	15
00	11–32	.34375	220	13.75
0	5–16	.3125	200	12.50
1	9–32	.28125	180	11.25
2	17–64	.265625	170	10.625
3	1–4	.25	160	10
4	15–64	.234375	150	9.375
5	7–32	.21875	140	8.75
6	13–64	.203125	130	8.125
7	3–16	.1875	120	7.5
8	11–64	.171875	110	6.875
9	5–32	.15625	100	6.25
10	9–64	.140625	90	5.625
11	1–8	.125	80	5
12	7–64	.109375	70	4.375
13	3–32	.09375	60	3.75
14	5–64	.078125	50	3.125
15	9–128	.0703125	45	2.8125
16	1–16	.0625	40	2.5
17	9–160	.05625	36	2.25
18	1–20	.05	32	2
19	7–160	.04375	28	1.75
20	3–80	.0375	24	1.50
21	11–320	.034375	22	1.375
22	1–32	.03125	20	1.25
23	9–320	.028125	18	1.125
24	1–40	.025	16	1
25	7–320	.021875	14	.875
26	3–160	.01875	12	.75
27	11–640	.0171875	11	.6875
28	1–64	.015625	10	.625

Digitized by Google

Number of Gauge	Approximate Thickness in Fractions of an Inch	Approximate Thickness in Decimal Parts of an Inch	Weight per Square Foot in Ounces Avoirdupois	Weight per Square Foot in Pounds Avoirdupois
29	9–640	.0140625	9	.5625
30	1–80	.0125	8	.5
31	7–640	.0109375	7	.4375
32	13–1280	.01015625	6½	.40625
33	3–320	.009375	6	.375
34	11–1280	.00859375	5½	.34375
35	5–640	.0078125	5	.3125
36	9–1280	.00703125	4½	.28125
37	17–2560	.006640625	4¼	.265625
38	1–160	.00625	4	.25

And on and after July first, eighteen hundred and ninety-three, the same and no other shall be used in determining duties and taxes levied by the United States of America on sheet and plate iron and steel. But this act shall not be construed to increase duties upon any articles which may be imported.

SECTION 3. That in the practical use and application of the standard gauge hereby established a variation of two and one-half per cent. either way may be allowed.

Approved March 3, 1893.

FORMULÆ FOR MAKING BLUE PRINT PAPER

Solution A

Citrate of iron and ammonia . . . . . 2½ oz.
Water . . . . . 10 oz.

Solution B

Red prussiate of potash . . . . . 1¼ oz.
Water . . . . . 10 oz.

Solution C

Gum arabic . . . . . ½ oz.
Water . . . . . 2 oz.

Digitized by Google

DIRECTIONS

Use equal parts of solutions *A* and *B* and add a few drops of solution *C*. Mix well and apply a thin even coat over the surface of the paper, using a wide, soft brush. This should be done by a very dim light. The coated paper will dry in a few minutes and should then be wrapped up securely so the light cannot get to it until used for printing. The printing is done in the sunlight, and then the paper is washed in clean cold water.

Solutions *A* and *B* are sensitive to light and should be kept in colored bottles.

Digitized by Google

INDEX

(The names of the authorities cited in the text are printed in SMALL CAPITALS)

Activities of race classified, 5.
Anvil, 85.
Appendix A, Key to the more important woods of North America, 233 to 282.
Appendix B, Problems in construction, 283 to 292.
Appendix C, Useful tables, 293 to 306.
Arrow, bow and, 3, 4.
Auger, 72.
Auger bit gauge, 75.
Auger bits, 73.

BAGLEY, WILLIAM CHANDLER, quoted, 14.
BAILEY, HENRY TURNER, quoted, 7.
Band saw, 104.
Bed marker, 193.
Belt hooks, 118.
Belt lacings, 115.
Belt punch, 86.
Belts, 112; formulæ used in selecting, 114.
Bench brush, 95.
Benches, 21.
Bench work, 174.
BENNETT, CHARLES A., quoted, 13.
Bevel, 27.
Bird's eye maple, 20.
Blotter pad, 185; decorations for, 186.
Blue prints, 18; how to make, 305.
Board measure, 292, 298.
Bookcases, 196, 202.
Book racks, 182, 183, 189, 195, 203, 205.
Boring tools, 72.
Bottom of block, 19.
Bow and arrow, 3, 4.
Brace, or bit brace, 76.
Brace measure, 32.
BUTCHER, CARL, quoted, 6.

Cabinet scraper, 94.
Calipers, 37.
Camp stool, 190.
Carborundum stones, 91, 92.
CARLYLE, THOMAS, quoted, 6.
Carpenter's square, 28.
Carvers' punch, 87.
Checks, in wood, 20.
Chessboard, 200.
Chisels, socket firmer, 39; corner, 40; tang firmer, 39, 40; turning, 41; carving, 46.
Circular saws, 107; speed of, 109; rules for speed, 110.
Clamping tools, 79.
Coat hangers, 175, 176.
Combination saw bench, 106.
Combination stones, 91.
Compasses, 36, 37.
Coniferous trees, 119.
Corner shelf, 194.
Countersink, 75.
Counting board, 188.
Cutting with knife, 167.

Dado heads, 107.
Desk and bookcase, combination, 211.
DEWEY, JOHN, quoted, 8.
Dicotyledonous trees, 120.
Dividers, 36, 37.
DOPP, KATHERINE ELIZABETH, quoted, 2.
Double hinge lace, 118.
Dovetail box, 189.

Digitized by Google

Dovetail joint, end, 212; half, 213.
Dowel bits, 74.
Dress down surface, 19.
Drills, 74.
Dutch plate rack, 198.

Edge tools, how to sharpen, 92, 93, 94.
Energy, 99.
English measure, 23, 24, 25; tables, 293.
Essex board measure, 33.

Fastening devices, 129 to 148.
File cleaner, 72.
Files, 70, 71.
Fillers, 155.
Floor broom holder, 206.
Folding screens, 199.
Footstools, 199, 204.
Formulæ for color decorations, 151.
Framing square, 28; history of, 34.

Gauge attachments, 36.
Gimlet bit, 75.
Glue, 141 to 146; kinds of, 141, 142; how manufactured, 141, 142; uses, 142, 143; heaters, 143; methods of gluing, 144, 145.
Gouges, turning, 40, 41; carving, 42, 43, 44, 45.
Grain of wood, 12.
Grindstone, 87.
Grindstone truing device, 89.
Gripping tools, 79.

Hammers, 83, 84.
Handles, 95, 96.
Hand screw, 79.
HANEY, JAMES P., quoted, 12.

Indian tribes, rules regarding bow and arrow, 4.
Inkstand, 191.
Institutions of society, 6.

JAMES, PROFESSOR, quoted, 12.
Jardinière stand, 206.
Jointer, 111.
Joints and wood fastenings, 147.

KARR, GRANT, quoted, 9.
Key rack, 187.
Key to the more important woods of North America, 233.
Knife box, 195.
Knife, sloyd, 38, 39.
Knife work, 163 to 174.

Lathe, woodturning, 111, 112, 113, 215, 216.
Lay out work, 19.
Letters and figures, 96.
Lumbering, 121.

Magazine rack, 208.
Mallet, 85.
Man, a tool-using animal, 1.
Manual training, defined, 1; its place in education, 1 to 15.
Marking gauge, 35.
Match box, 170, 171.
Match strike, 165 to 169.
Maydole, David, 83.
Measure, long, 293; square, 293; cubic, 293; liquid, 294; dry, 294.
Measuring and lining, 163, 164, 165.
Metric system, 25; tables, 296.
Miter box, 68, 69.
Miter planer, 69.
Model, 19.
Monocotyledonous trees, 120.
MORRIS, WILLIAM, quoted, 14.
Mortise-and-tenon joint, through, 214.
Mortise gauge, 35, 36.

Nails and nailing, 129 to 135.
Nails, history of, 129, 130; kinds of, 130, 131; penny, 130; names of steel wire, 131, 132, 133; cut, 132; uses, 134; steel wire brads, 135; tables, 299, 300, 301.
Nail set, 86.
New style lace, 116.

Object, 19.
Octagon "eight-square" scale, 32.

Digitized by Google

Oiler, 95.
Oil slip, 91.
Oil stone, 90.
Old style lace, 115.
O'Shea, M. V., quoted, 8.

Parker, Col. F. W., quoted, 10, 11.
Parting tool, 41, 47.
Picture frames, 188, 207.
Pigments, 152.
Planes, 48 to 53.
Plant marker, 193.
Plate iron gauge, 304, 305.
Plate racks, 198, 208.
Pliers, flat nose, round nose, 82.
Plug cutter, 78.
Plumb and level, 34, 35.
Polishing in the lathe, 158.
Pounding tools, 86.
Power, 99 to 104.
Problems in construction and geometric helps, 283 to 290.
Project, 19.
Punching tools, 86.

Rafter table, 28 to 31.
Rasps, 70, 71, 72.
Rule, 26.
Ruskin, John, quoted, 14.

Saw bench, 106.
Saw guard, 107.
Sawing exercise, 211.
Saws, their construction, 55; rip, 57; how to sharpen, 57; cross-cut, 62; how to sharpen, 62; back, 66; bracket, 67; hack, 68; miter, 69; swing, 105.
Schedule of work, 15, 16.
Screw clamp, 79.
Screwdriver, 77.
Screwdriver bit, 77.
Screw and plug bit, 78.
Screws, definition of, 136; history of, 137; classification of, 137; uses of, 137, 138; how to drive, 139, 140; gauge, 301.
Scribe, 20.
Scripture, Edward W., quoted, 13.
Shellac, 154, 155.
Shelves, 174, 175, 187.
Single hinge lace, 112.
Sleeve board, 193.
Sloyd knife, 38, 39.
Snips, 54.
Spokeshave, 54.
Square, or steel square, 28 to 34.
Squaring a block, 19.
Stains, how to prepare, 153.
Steel bar clamp, 80.
Stickley, Gustav, quoted, 12.
Stock, 18.
Suggestions to students, 15, 16.
Surfacer, single, 110.
Sweet-pea rack, 201.

Tabourets, 190, 192, 197.
Technical terms, 18.
Timber, properties of, 299.
Tool list, 20.
Toothbrush holder and shelf, 178, 179.
Towel rollers, 179, 180, 181, 191, 194.
Trees, decay of, 121.
Trimmer, 97, 98.
Try-square, 27.

Umbrella rack, 209.

Varnishes, 153.
Vehicles, 152.
Vise, stationary iron, 80; picture frame, 83; saw, 82.

Weights, avoirdupois, 294; troy, 295; apothecaries, 295.
Whisk-broom holders, 172, 173, 184.
Wilson, Thomas, quoted, 4.
Windmill vane, 210.
Wire gauge, 38; tables, 303.
Wood, outline study, 119; composition of, 121; properties of, 121; weight, 121, 122; seasoning, 122, 123; shrinkage, 123; stiffness or elasticity, 123; laws of, 124; table of, 125; cross-breaking or bending strength, 125; laws of,

Digitized by Google

125, 126; table of, 126; tension and compression, 127; table of, 127, 128; shearing, 128; cleavability, 128; flexibility, 128; toughness, 128.
Wood-carving tools, 42.
Wood drills, 74.
Wood fastenings, dowels, pins, cleats, keys, wedges, 146, 147.
Wood finishing, 149; specifications for, 155 to 158.
Woods, non-porous, 234, 236 to 240; ring-porous, 234, 240 to 246; diffuse-porous, 235, 246 to 252; list of the more important woods of the United States, 253 to 282.
Wood turning, 215 (*see* Lathe, 111); history of, 216; directions for, 216, 217; exercises, 217 to 232; tools, 42; positions of tools, 218 to 221, 226.
Work, 99; schedule of, 15, 16.
Work, Cree T., quoted, 18.
Working face, 18.
Wrench, 81.

Digitized by Google

Digitized by Google

To avoid fine, this book should be returned on
or before the date last stamped below

50M—9-40

FEB 1 1949

AUG 1 1949

AUG 1950

FEB 6 1951

Digitized by Google

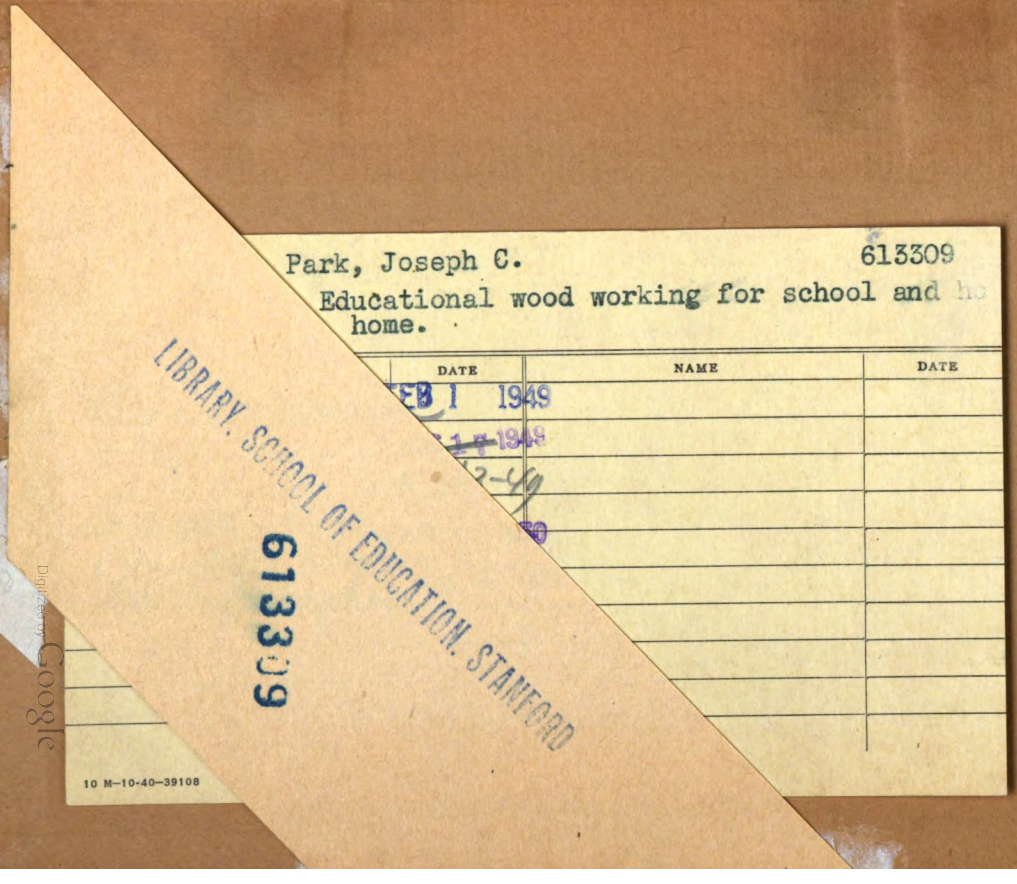

Digitized by Google

Tx
680.4
P235

Digitized by Google